UNIT I
GROUPS AND RINGS
PART-A

1. State any two properties of a group.

Closure property: a*b $\in$ G, for all a,b $\in$ G

Associative property: (a*b)*c=a*(b*c), for all a,b,c $\in$ G

2. Define Homomorphism of groups.

Let (G,*) and (G,o) be two groups and f be a function from G into G1. Then f is called a ***homomorphism*** of G into G1 if for all a,b ∈ G,

f(a*b) = f(a) o f(b).

3. Give an example of Homomorphism of groups.

Consider the group (Z,+). Define f:Z →Z by f(n) = 3n for all n∈ Z

Here the function f is from the group (Z,+) to (Z,+)

Let n,m ∈ Z then we get n+m ∈ Z and we have f(n+m) = 3(n+m) = 3n + 3m = f(n) + f(m)

Hence the function f is a homomorphism.

4. Define Isomorphism.

Let (G,*) and (G',o) be two groups and f : G → G' be a homomorphism of groups then f is called a isomorphism if f is a bijective(one-to-one and onto) function.

5. Give any two Example of Isomorphism.

Example:1

Consider the function f: Z → Z by f(x) = x, Now we have to show that f is a homomorphism.

Take any two elements x, y belongs to Z ,Then x + y belongs to Z, Hence f(x+y) = x + y = f(x) + f(y)

Hence f is homomorphism.

Since the function f(x) = x is bijective. f is an isomorphism.

Example :2

Consider the function f: Z → Z by f(x) = x. Take any two elements x,y belongs to Z ,Then x + y belongs to Z, Hence f(x+y) = x + y = f(x) + f(y) Hence f is homomorphism.

Since the function f(x) = x is bijective. f is an isomorphism.

6. Show that ($Z_{5,}, +_5$) is a cyclic group.

$+_5$	[0]	[1]	[2]	[3]	[4]
[0]	0	1	2	3	4
[1]	1	2	3	4	0
[2]	2	3	4	0	1
[3]	3	4	0	1	2
[4]	4	0	1	2	3

$1^1 = 1$

$1^2 = 1 +_5 1 = 2$

$1^3 = 1 +_5 1^2 = 1 +_5 2 = 3$

$1^4 = 1 +_5 1^3 = 1 +_5 3 = 4$

$1^5 = 1 +_5 1^4 = 1 +_5 4 = 0$

Hence ($Z_{5,}, +_5$) is a cyclic group and 1 is a generator.

7. Prove that the group $H = (Z_4, +)$ is cyclic.

Here the operation is addition, so we have multiplies instead of powers. We find that both [1] and [3] generate *H*. For the case of [3], we have

1.[3]=[3], 2.[3]=[2], 3.[3]=[1], and 4.[3]=[0].

Hence *H*=<[3]>=<[1]>.Hence $H = (Z_4, +)$ is cyclic

8. Prove that $U_9 = \{1,2,4,5,7,8\}$ is cyclic group.

Here we find that 2^1=2, 2^2=4, 2^3=8, 2^4=7, 2^5=5,2^6=1,

So U_9 is a cyclic group of order 6 and $U_9 = \langle 2 \rangle$ and also true that $U_9 = \langle 5 \rangle$

because 5^1=5, 5^2=7, 5^3=8, 5^4=4, 5^5=2, 5^6=1.

9. Define Left coset and Right coset of the group.

If H is a subgroup of G,then for each $a \in G$,the set $aH = \{ah / h \in H\}$is called a l eft coset of H in G and $Ha = \{ha / h \in H\}$is a right coset of H in G.

10. Consider the group Z_4= {[0],[1],[2],[3]} of integers modulo 4. Let H={[0],[2]} be a subgroup of Z_4 under $+_4$. Find the left cosets of H.

[0] + [H] = {[0],[2]} = H
[1] + [H] = {[1],[3]}
[2] + [H] = {[2] ,[4]} = {[2],[0]} = {[0],[2]} = H
[3] + [H] = {[3] , [5]} = {[3],[1]} = {[1],[3]} = [1] + H

∴ [0] + H = [2] + H = H and [1] + H = [3] + H are the two distinct left cosets of H in Z_4

11. State Lagrange's theorem for finite groups. Is the converse true?

If G is a finite group and H is a sub group of G, then the order of H is a divisor of order of G. The converse of Lagrange's theorem is false.

12. Define ring and give an example of a ring with zero-divisors.

An algebraic system (R,+,.) is called a ring if the binary operation + and . satisfies the following conditions.

(i) (a+b)+c=a+(b+c) a,b,c ∈ R
(ii) There exists an element 0 ϵ R called zero element such that a+0 = 0+a =a for all a ∈ R
(iii) For all aϵR,a+(-a) =(-a)+a = 0,-a is the negative of a.
(iv) a+b =b+a for all a,b ϵR
(v) (a.b).c =a.(b.c) for all a,b,c ∈ R

The operation * is distributive over + i.e.,for any a,b,c ϵ R, a.(b+c) = a.b +a.c , (b+c).a = b.a +c.a In otherwords, if R is an abelian group under addition with the properties (iv) and (v) then R is a ring.

Example:The ring (Z_{10},$+_{10}$,X_{10}) is not an integral domain.Since $5X_{10}2$,yet $5 \neq 0, 2 \neq 0$ in Z_{10}.

13. Define unit and multiplicative inverse of a Ring.

Let R be a ring with unity u. If a ∈ R and there exists b ∈ R such that ab=ba=u, then b is called a multiplicative inverse of a and a is called a unit of R.

14. Define integral domain and give an example.

Let R be a commutative ring with unity. Then R is called an integral domain if R has no proper divisors of zero.

Example: (Z,+,●) is an integral domain and Q,R,C are integral domain under addition and multiplication

15. Define Field and give an example.

A commutative ring (R,+,●) with identity is called a field if every non-zero element has a multiplicative inverse. Thus (R,+,●) is a field if

(i) (R,+) is abelian group and
(ii) (R-{0},●) is also abelian group.

Example: (R,+,●) is a field.

16. Give an example of a ring which is not a field.

(Z,+,●) is a ring but not a field, if every non-zero element need not a multiplicative inverse.

17. Define Integer modulo n.

Let $n \in Z^+$, n>1. For a,b ∈ Z, we say that " a is congruent to b modulo n", and we write $a \equiv b (\bmod n)$, if $n | (a-b)$, or equivalently, $a = b + kn$ for some $k \in Z$.

18. Determine the values of the integer n>1 for the given congruence $401 \equiv 323$(mod n) is true.

401-323=78=2.3.13 there are five possible divisors (n>1),namely 2,3,6,26,39.

19. Determine the values of the integer n>1 for the given congruence $57 \equiv 1$(mod n) is true.

57-1=56=2^3.7. So there are six divisors, namely 2,4,8,14,28,56

20. Determine the values of the integer n>1 for the given congruence $68 \equiv 37$(mod n)is true.

68-37=31, prime, consequently n=31.

21. Determine the values of the integer n>1 for the given congruence $49 \equiv 1$(mod n)is true.

49-1=48=2^4.3. So there are nine possible values for n>1, namely 2,4,8,16,3,6,12,24,48.

22. Find all subrings of Z_{24}.

The set of all subrings of Z_{24} is {0},{0,12},{0,8,16}, {0,6,12,18}, {0,4,8,12,16,20}, {0,3,6,...,18,21}, {0,2,4,6,...,20,22}, Z_{24}

23. Define Ring homomorphism.

Let $(R,+,\bullet)$ and $(S,\oplus,\otimes)$ be rings. A function $f:R\to S$ is called a ring homomorphism if for all $a,b\in R$,

a) f(a+b)=f(a) $\oplus$ f(b), and
b) f (a.b)=f(a) $\otimes$ f(b). When the function f is onto we say that S is a homomorphic image of R.

24. Define Ring isomorphism.

Let $f:(R,+,\bullet)\to(S,\oplus,\otimes)$ be a ring homomorphism. If f is one-to-one and onto, then f is called a ring isomorphism and we say that R and S are isomorphic rings.

25. State Chinese Remainder Theorem.

Let $m_1,m_2,...,m_k\in Z^+-\{1\}$ with $k\ge 2$, and with $\gcd(m_i,m_j)=1$ for all $1\le i<j\le k$. Then the system of k congruences.

$$x\equiv a_1 (\bmod m_1)$$
$$x\equiv a_2 (\bmod m_2)$$
$$...$$
$$x\equiv a_k (\bmod m_k)$$

Has a simultaneous solution. Further , any two such solutions of the system are congruence modulo $m_1,m_2,...,m_k$.

PART-B

1. (a) Let $(G,o),(H,*)$ be groups with respective identities e_G,e_H. If $f:G\to H$ is a homomorphism, then
   a) $f(e_G)=e_H$ b) $f(a^{-1})=[f(a)]^{-1}$ for all $a\in G$.
   c) $f(a^n)=[f(a)]^n$ for all $a\in G$ and all $n\in Z$
   d) $f(S)$ is a subgroup of H for each subgroup S of G. **(8)**

   (b) Let $a\in G$ with O(a)=n. if $k\in Z$ and $a^k=e$, then n/k. **(8)**

2. State and prove the fundamental theorem of group homomorphism's. **(16)**

3. (a) Let G be a cyclic group. **(8)**
   a) If $|G|$ is infinite, then G is isomorphic to $(Z,+)$.
   b) If $|G|$=n, where n>1, then G is isomorphic to $(Z_n,+)$.

   (b) Every subgroup of a cyclic group is cyclic **(8)**

4. Show that $(M,\bullet)$ is an abelian group where $M=\{A,A^2,A^3,A^4\}$ with $A=\begin{bmatrix}0 & 1\\ -1 & 0\end{bmatrix}$ and $\bullet$ is ordinary matrix multiplication. Further prove that $(M,\bullet)$ is isomorphic to the abelian group $(G,\bullet)$ where $G=\{1,-1,i,-i\}$ and $\bullet$ is ordinary multiplication. **(16)**

5. (a) Find the left cosets of the subgroup $H=\{[0],[3]\}$ of the group $(Z_6,+_6)$ **(8)**

   (b) Show that H = { [0],[4],[8] } is a subgroup of $(Z_{12},+_{12})$. Also find the left Cosets of H in $(Z_{12},+_{12})$. **(8)**

6. State and prove Lagrange's theorem for finite group. **(16)**

7. (a) For $\beta=\begin{pmatrix}1 & 2 & 3 & 4\\ 4 & 1 & 2 & 3\end{pmatrix}$ find the subgroup $k=\langle\beta\rangle$. **(8)**

   (b) Determine the left cosets of k in $G=S_4$. **(8)**

8. (a) Let R be a ring with unity u. Prove that the units of R form a group under the multiplication of the ring. **(8)**

(b) Determine whether $(z,\oplus,\circ)$ is a ring with the binary operations $x\oplus y = x+y-7, x\circ y = x+y-3xy$ for all $x,y\in Z$. **(8)**

9. (a) For any ring $(R,+,\bullet)$ and any $a\in R$, we have $az = za = a$. **(8)**

(b) Given a ring $(R,+,\bullet)$, for all $a,b\in R$, **(8)**

a) $-(-a)=a$,
b) $a(-b)=(-a)b=-(ab)$, and
c) $(-a)(-b)=ab$.

10. For a ring $(R,+,\bullet)$, **(16)**

a) if R has a unity, then it is unique, and
b) if R has a unity, and x is a unit of R, then the multiplicative inverse of x is unique.

11. Let $(R,+,\bullet)$ be a commutative ring with unity. Then R is an integral domain if and only if, for all $a,b,c\in R$, where $a\neq z, ab=ac \Rightarrow b=c$. **(16)**

12. (a) Show that $(Z,+,\times)$. is an integral domain where Z is the set of all integers. **(8)**

(b) If $(F,+,\bullet)$ is a field, then it is an integral domain. **(8)**

13. Given a ring $(R,+,\bullet)$, a nonempty subset S of R is a subring of R if and only if **(16)**

a) for all $a,b\in S$, we have $a+b, ab\in S$,
b) for all $a,b\in S$, we have $-a\in S$.

14. Let consider the ring $R=M_2(Z)$ and the subset $S=\left\{\begin{bmatrix} x & x+y \\ x+y & x\end{bmatrix}; x,y\in Z\right\}$ of R. Prove that S is subring of R. **(16)**

15. Let $A=\left\{\begin{bmatrix} a & 0 \\ b & c\end{bmatrix}; a,b,c\in Z\right\}$ be the subset of the ring $R=M_2(z)$. Prove that A is a subring **(16)**

16. (a) For $n\in Z^+, n>1$, under the closed binary operations defined above, Prove that Z_n is a commutative ring with unity. **(8)**

(b) Prove that Z_n is a field if and only if n is a prime. **(8)**

17. (a) In Z_n, prove that [a] is a unit if and only if gcd(a,n)=1. **(8)**

(b) Find $[25]^{-1}$ in Z_{72}. **(8)**

18. Let $f:(R,+,\bullet)\to(S,\oplus,\otimes)$ is a ring homomorphism, then **(16)**

a) $f(Z_R)=Z_S$, where Z_R, Z_S are the zero elements of R and S, respectively;
b) $f(-a)=-[f(a)]$, for all $a\in R$;
c) $f(na)=nf(a)$, for all $a\in R, n\in Z$;
d) $f(a^n)=[f(a)]^n$, for all $a\in R, n\in Z^+$; and
e) If A is a subring of R, it follows that f(A) is a subring of S.

19. State and prove The Chinese Remainder Theorem. **(16)**

20. Let $A=\left\{\begin{bmatrix} a & 0 \\ 0 & a\end{bmatrix}; a\in R\right\}$ **(16)**

a) show that A is a ring under matrix addition and multiplication
b) Prove that R is isomorphic to A.

UNIT II
FINITE FIELDS AND POLYNOMIALS
PART-A

1. Define ring.

A non empty set R with two binary operations + and. is called a ring if (R,+) is an abelian group,(R,.) is closed under the associative operation . , and the two operations are related by the distributive laws:

a (b+c)=ab+ac and (b+c)a=ba+ca, for all a,b,c$\in R$ (Here ab=a.b)

2. Define polynomial.

Given a ring (R,+,.), an expression of the form $f(x)=a_n x^n + a_{n-1}x^{n-1} + \dots\dots\dots + a_1 x^1 + a_0 x^0$, *where* $a_i \in R$ *for* $0 \le i \le n$, is called a polynomial in the indeterminate x with coefficients from R.

3. Define Field.

A field is a nonempty set F of elements with two operations '+' (called addition) and '·' (called multiplication) satisfying the following axioms. For all a, b, c ∈ F:

(i) F is closed under + and · ; i.e., a + b and a · b are in F.
(ii) Commutative laws: a + b = b + a, a · b = b · a.
(iii) Associative laws: (a + b) + c = a + (b + c), a · (b · c) = (a · b) · c.
(iv) Distributive law: a · (b + c) = a · b + a · c.

4. What is meant by a finite field?

A field containing only finitely many elements is called a finite field, A finite field is simply a field Whose underlying set is finite. Eg: F_2, whose element 0 and 1.

5. What is meant by polynomial ring?

If R is a ring , then under the operations of addition and multiplication + and .,(R[x],+,.) is a ring ,called the polynomial ring, or ring of polynomials over R.

6. Define root of the polynomial.

Let R be a ring with unity u and let f(x) $\in R(x)$,with degree f(x) ≥ 1. If r$\in R$ and f(r)=z, then r is called a root of the polynomial f(x)

7. When do you you say that f(x) is a divisor of g(x)?

Let F be a field. For f(x), g(x) $\in F(x)$, where f(x) is not a zero a polynomial , we all f(x) a divisor of g(x) if there exists h(x) $\in F(x)$ with f(x)h(x)=g(x). In this situation we also say that f(x) divides g(x) and that g(x) is a multiple of f(x)

8. Find the roots of f(x)=x²-2$\in Q(x)$.

f(x)= $x^2-2=(x+\sqrt{2})(x-\sqrt{2})$

Since $\sqrt{2}$ and -$\sqrt{2}$ are irrational numbers , f(x) has no roots.

9.Find all roots of f(x)=x²+4x if f(x) $\in z_{12}[x]$

Z_{12}={0,1,2,3,4,5,6,7,8,9,10,11}
f(0)=0+0=0 $\therefore$ 0 is a root of f)x)
f(1)1+4=5
f(2)=4+8=12=0
So 2 is a root.
f(3)=21, f(4)32
f(5)=45,f(6)=60=0
So 6 is a root
f(7)=77, f(8)=96=0
So 8 is aroot.
f(9)=81+36=117. f(10)100+40=140
f(11)=121+44=165
Thus x=0,2,6,8 are the roots of f(x)

10. State division algorithm

Let f(x),g(x) $\in F(x)$ with f(x) not the zero polynomial. There exists unique polynomials q(x), r(x) $\in F(x)$such that g(x)=q(x)f(x)+r(x),where r(x)=0 or degree r(x)< degree f(x).

11. State the remainder theorem.

The remainder theorem:
For f(x) $\in F(x)$and a$\in F$, the remainder in the division of f(x) by x-a is f(a).

12. Determine all polynomials of degree 2 in z_2[x].

The polynomials are

(i) x^2
(ii) x^2+x
(iii) x^2+1
(iv) x^2+x+1

13. State the factor theorem.

If f(x) $\in F(x)$ and a f(x) $\in F$, then x-a ia a factor of f(x) if and only if a is a root of f(x).

14. Determine polynomial h(x) of degree 5 and polynomial k(x)of degree 2 such that degree of h(x)k(x) is 3.

Choose $h(x)=4x^5+x$ of degree 5 and $k(x)3x^2$ of degree 2. Then $h(x)k(x)= (4x^5+x)(3x^2)=12x^7+3x^3=0+3x^3$ which is of degree 3.

15. Define reducible and irreducible polynomials .

Let f(x) $\in F(x)$, with F a field and degree f(x) ≥ 2. We call f(x) reducible over F if there exists g(x),h(x) $\in F(x)$,where f(x)=g(x)h(x) and each of g(x),h(x) has degree ≥ 1. If f(x) is not reducible it is called irreducible or prime.

16. Give example for reducible and irreducible polynomials .

The polynomial $f(x) =x^4+2x^2+1$ is reducible . Since $x^4+2x^2+1=(x^2+1)^2$
The polynomial x^2+1 is irreducible in Q[x] and R[x]but in C[x] it is reducible.

17. Verify the polynomial x^2+x+1 over Z_3,Z_7 irreducible or not.

The polynomial $x^2+x+1=(x+2)(x+2)$ is irreducible over Z_3
The polynomial $x^2+x+1=(x+5)(x+3)$ is irreducible overZ_7.

18. What is meant by monic polynomial?

A polynomial f(x) $\in F(x)$ is called monic if its leading coefficients is 1, the unity of F.
Example: $x^2+2x+ 1$

19. When do you say that 2 polynomials are relatively prime?

If f(x),g(x) $\in F(x)$ and their gcd is 1, then f(x) and g(x)are calle d relatively prime.

20. What is the characteristic of R?

Let (R,+,.) be a ring. If there is least positive integer n such that nr=z(the zero of R) for all r$\in$R, the we say that R has characteristic n and write characteristic n. When no such integer exists , R is said to be characteristic 0.

21. Find the characteristic of the following rings a) (Z_3,+,.) b)(Z_4,+,.) and Z_3[x]

The ring (Z_3,+,.) has characteristic 3.
The ring (Z_4,+,.) has characteristic 4
Z_3[x] has characteristic 3.

22. Give an example of a polynomial f(x) $\in R(x)$ where f(x) has degree 8, is reducible but has no real roots.

Choose $f(x)=(x^2+9)^4$ is of degree 8, is reducible but has no real roots.

23. Write f(x)= $(2x^2+1)(5x^3-5x+3)(4x-3) \in z_7[x]$ as the product of unit and three monic polynomials.

$$\begin{aligned} f(x) &= (2x^2+1)(5x^3-5x+3)(4x-3) \\ &= 2(x^2+4)5(x^3-x+2)4(x-6) \\ &= 40(x^2+4)(x^3-x+2)4(x-6) \\ &= 5(x^2+4)(x^3-x+2)4(x-6) \end{aligned}$$

Here each polynomial is monic.

24. If f(x) and g(x) are relatively prime and $\in F(x)$ where F is any field , show that there is no element a$\in F$ such that f(a)=0 and g(a)=0

Suppose there exists a$\in F$ such that f(a)=0 and g(a)=0. Then (x-a) would be a factor of both f(x) and g(x). So (x-a) would divide the gcd of both f(x) and g(x).But this is a contradiction since f(x) and g(x) are relatively prime.

25. Define congruence modulo m.

Let a, b and m > 1 be integers. We say that a is congruent to b modulo m, written as

a ≡ b (mod m), if m|(a − b); i.e., m divides a − b.

PART B

1. (a)Show that (R,+,.) is a ring **(8)**
   (b)Show that R[x] is a polynomial ring over R. **(8)**
2. (a)If R is an integral domain ,prove that f(x) is an unit in R[x], then prove that f(x) is constant and is unit in R **(8)**
   (b)If R[x] is a polynomial ring then show that it is commutative. **(8)**
3. (a)Prove that every field is an integral domain. **(8)**
   (b)Let (R,+,.) be a commutative ring with unity u .Show that R is an integral domain if and only if for all f(x),g(x) $\in R(x)$, if neither f(x) nor g(x) is the zero polynomial , then degree f(x) g(x)=degree f(x)+degree g(x) **(8)**
4. (a)Find all the irreducible polynomials in $Z_2[x]$ **(8)**
   (b)Find all the roots of f(x)=x^2+3x+2 $\in Z_6[x]$ **(8)**
5. State and prove Division algorithm **(16)**
6. (a)State and prove remainder and factor theorem **(8)**
   (b) Discuss irreducible and reducible polynomials with example over R[x],Q[x],C[x]. **(8)**
7. (a)Find the remainder when f(x) is divisible by g(x)
   f(x),g(x) $\in Q(x)$, $f(x)=x^8+7x^5-4x^4+3x^3+5x^2-4$, $g(x)=x-1$ **(8)**
   (b) f(x),g(x) $\in Z_{11}(x)$, $f(x)=3x^5-8x^4+3x^3-x^2+4x-7$, $g(x)=x+9$ **(8)**
8. (a)If f(x) $\in F(x)$ has degree n ≥ 1, then prove that f(x) has atmost n roots. **(8)**
   (b)If g(x)= x^5-2x^2+5x-3 *and* $f(x)=x^4-5x^3+7x$, determine q(x) and r(x) such that g(x)=q(x)f(x)+r(x) **(8)**
9. (a)If f(x)=x^4-16, find its roots and factorization in Q(x). **(8)**
   (b)Determine all the polynomials of degree 2 in $Z_7[x]$. **(8)**
10. (a)Find all the roots of f(x)=x^2+4x if f(x) =$Z_{12}[x]$ **(8)**
    (b)Show that for all f(x) $\in F(x)$, every nonzero polynomial of degree ≤ 1 is irreducible. **(8)**
11. (a)Let (F,+,.) be a field . If char(F)>0, then show that char(F) must be finite. **(8)**
    (b) Prove that the characteristic of a field is either 0 or a prime number **(8)**
12. (a)Prove that the polynomial f (x) = $x^4 + 2x^6 \in Z_3[x]$ is of degree 6 is reducible . **(8)**
    (b)Show that a finite field has order p^t, where p is a prime and t$\in Z^+$ **(8)**
13. (a)Construct a finite field of 25 elements. **(8)**
    (b)Give characteristic for the following rings **(8)**
    (a)Z_{11} (b)$Z_{11}[x]$ (c)Q[x]
14. (a)Find the roots of f(x)= $= x^2+3x+2 \in Z_6[x]$ **(8)**
    (b)State and prove Euclidean algorithm. **(8)**
15. (a)Show that g(x)=q(x)f(x)+r(x), if g(x) =x^4+2x^3+x+4, f(x)=x^2+3x+1 **(8)**
    (b) Show that Z_m is a field if and only if m is a prime. **(8)**

UNIT-III
DIVISIBILITY THEORY AND CANONICAL DECOMPOSITIONS
PART-A

1. **Write about divisible.**
   An integer b is divisible by an integer a, not zero, if there is an integer x such that b = ax, and we write a/b. m In case b is not divisible by a, we write a\b.
2. **Define division algorithm**.
   Given any integers a and b, with a > 0, there exist unique integers q and r such that b =qa + r, 0 < r < a. If a\b, then r satisfies the stronger inequalities z < r < a.
3. **Define greatest common divisor of b.**

The integer a is a common divisor of b and c in case a/b and a/c. Since there is only a finite number of divisors of any nonzero integer, there is only a finite number of common divisors of b and c, except in the case b=c=0, If at least one of b and c is not 0, the greatest among their common divisors is called the greatest common divisor of b and c and is denoted by (b, c).

4. **Define Euclidean algorithm.**

Given integers b and c > 0, we make a repeated application of the division algorithm, to obtain a series of equations

$b = cq_1 + r_1, \quad 0<r_1<c$

$c = r_1q_2 + r_2, \quad 0<r_2<r_1$

$r_1= r_1q_3 + r_3, \quad 0<r_2<r_1$

…….. …..

$r_{j-2} = r_{j-1}q_j + r_j, \quad 0<r_2<r_1$

$r_{j-1} = r_jq_{j+1}$

The greatest common divisor (b, c) of b and c is r_j, the last nonzero remainder in the division process. Values of x_0 and y_0 In (b, c) = bx_0+cy_0 can be obtained by writing each r_i as a linear combination of b and c.

5. **Solve by Euclidean algorithm for b=288 and c=158.**

288=158.2-28
158=28.6-10
28=10.3-2
10=2.5

6. **Define least common multiple.**

The integers $a_1,a_2,\ldots.a_n$. all different from zero, have a common multiple b if a_i/b for i=1,2,….n. The least of the positive common multiples is called the least common multiple [le, and it is denoted by $[a_1,a_2,\ldots.a_n]$.

7. **Define prime number.**

An integer p>1 is called a prime number, or a prime , in case there is no divisor d of satisfying 1<d<p.

8. **Define Composite number with example**.

If an integer a>1 is not a prime, it is called a composite number. Eg: 4,6,8,9….

9. **State the binomial theorem.**

For any integer n≥1 and any real numbers x and y $(x+y)^n = \sum_{k=0}^{n}\binom{n}{k}x^k y^{n-k}$.

10. **Define arithmetical function with example**.

A function f(n) defined for all natural numbers n is called an arithmetical function. Eg:x^2+x-3

11. **Prove that if n is an even number, then 3^n+1 is divisible by 2; if n is an odd number, k then 3^n+1 is divisible by 2^2; if n is any number, whether even or odd, then 3^n+1 is not divisible by 2^m with m≥3.**

Since the square of an odd number minus 1 is a multiple of 8, when n=2m we have $3n=3^{2m}=(3^m)^2=8a+1$, and therefore$3^n+1=2(4a+1)$. When n=2m+1, we have $3^n+1=3^{2m}+1=3(8a+1)+1=4(6a+1)$. Since 4a+1 and 6a+1 are odd , the statement is true.

12. **Show that if $1<a_1<a_2\ldots.<a_{n-1}<a_n$, then there exist i and j with i<j, such that a_i/a_j.**

Let $a_i=2^{ni}b_i,n_i\geq 0)$, b_i is odd. Since among 1,2,….,2n, there are only n distinct odd numbers $b_1,\ldots.,b_{n+1}$ are not all distinct, in other words, among them there are some equal odd numbers, Let $b_i=b_j$. Then ai/aj.

13. **Define square number with example.**

If an integer a is a square of some other integer, then a is called a square number.Eg:4,9,16…

14. **Find the greatest common divisor of 525 and 231.**

From 525=2.231+63
231=3.63+42
63=1.42+21
42=2.21

Therefore g.c.d.(525,231)=21

15. **Find GCD(136,221,391)**.

(136,221,391)= (136,221-136,391-2.136)
= (136,85,119)
= (51,85,34)
=(17,17,34)=17

PART-B

1. (a) State and prove division algorithm. **(8)**
   (b) If g is the greatest common divisor of b and c, then prove that there exist integers x0 and y0 such that g=(b,c)=bx0+cy0. **(8)**
2. (a) If c\ab and (b,c)=1, then prove that c\a. **(8)**
   (b) State and prove Euclidean algorithm. **(8)**
3. (a) Find the greatest common divisor of 42823 and 6409. **(8)**
   (b) Find integers x and y to satisfy 42823x + 6409y=17. **(8)**
4. (a) Find g=(b,c) where b=5033464705 and c=3137640337, and determine x and y such that bx + cy = g. **(8)**
   (b) Find the least common multiple of (i)482 and 1687, (ii)60 and 61. **(8)**
5. (a) How may integers between 100 and 1000 are divisible by 7? **(8)**
   (b) Prove that the product of three consecutive integers is divisible by 6 of four consecutive integers by 24. **(8)**
6. (a) Show that if k is any positive integer, then k^2+k+1. **(8)**
   (b) Let a>1, and m, n be positive integers. Prove that $(a^m-1,a^n-1)=a^{(m,n)}-1$ **(8)**
7. (a) If m is a composite integer prove that the following integer is so too: n_m=11……11(m times). **(8)**
   (b) If p is prime, propve that there exist no positive integers a and b such that $a^2=pb^2$. **(8)**
8. (a) If an integer a is greater than 2 , prove that S(a)<a√(a) **(8)**
   (b) Prove that if $3/(a^2+b^2)$, then 3/a and 3/b. **(8)**
9. (a) Find the smallest positive integer having only 10 positive divisors. **(8)**
   (b) Find the smallest positive integer if the sum of all its divisors is 15. **(8)**
10. (a) Find all the integers n such that P(n)=64. **(8)**
    (b) Prove that there are infinitely many primes of the form 3n+2. **(8)**
11. (a) Find positive integers a and b satisfying the equations (a,b)=10 and [a,b]=100 simultaneously. Find all solutions. **(8)**
    (b) Prove that (a, b)=a, b, a+b) and more generally that (a, b)=(a, b, ax+by) for all integers x, y. **(8)**
12. (a) Prove that (a, a+k)/k for all integers a, k not both zero **(8)**
    (b) Prove that (a, a+2) =1 or 2 for every integer a. **(8)**
13. (a) Prove that an integer is divisible by 3 if and only if the sum of it digits is divisible by 3. Prove that an integer is divisible by 9 if and only if the sum of its digits is divisible by 9. **(8)**
    (b) Prove that an integer is divisible by 11 if and only if the difference between the sum of the digits in the odd places and the sum of the digits in the even places is divisible by 11. **(8)**
14. (a) Prove that any prime of the form 3k+1 is of the form 6k+1. **(8)**
    (b) If x and y are odd, prove that x^2+y^2 cannot be a perfect square. **(8)**
15. (a) If x and y are prime to 3, prove that x^2+y^2 cannot be a perfect square. **(8)**
    (b) Show that n/(n-1)! For all composite n>4. **(8)**

UNIT IV
DIOPHANTINE QUATIONS AND CONGRUENCES
PART A

1. **Define linear Diophantine equation.**
   Any linear equation in two variables having integral coefficients can be put in the form ax + by = c where a, b, c are given integers.
2. **State about the solution of linear Diophantine equation.**
   Consider the equation ax + by = c ----(1), in which x and y are integers. If a=b=c=0, then every pair (x, y) of integers is a solution of (1), whereas if a = b = 0 and c $\neq$ 0, then (1) has no

solution. Now suppose that at least one of a and b is nonzero, and let g = gcd (a, b). If g/c then (1)has no solution.

3. Write the solution of ax + by =c.

If the pair (x_1, y_1) is one integral solution, then all others are of the form $x = x_1 + kb/g$, $y = y_1 = ka/g$ where k is an integer and g=gcd (a, b)

4. Define unimodular with example.

A square matrix U with integral elements is called unimodular if det(U)=±1.Eg: Identity matrix

5. Define Pythagorean triangle.

We wish to solve the equation $x^2+y^2=z^2$ in positive integers. The two most familiar solutions are 3,4,5 and 5,12,13. We refer to such a triple of positive integers as a Pythagorean triple or a Pythagorean triangle, since in geometric terms x and y are the legs of a right triangle with hypotenuse z.

6. Write the legs of the Pythagorean triangles.

The legs of the Pythagorean triangles.

$X=r^2-s^2$

$Y=2rs$

$Z=r^2+s^2$

7. Define congruent and not congruent.

If an d integer m, not zero, divides the difference a-b, we say that a is congruent to b modulo m and write $a \equiv b(\text{mod } m)$. If a-b is not divisible by m, we say that a is not congruent to b modulo m, and in this case we write $a \neq b(\text{mod } m)$.

8. Define residue.

If $x \equiv y(\text{mod } m)$ then y is called a residue of x modulo m.

9. Define complete residue

A set $x_1,x_2,\ldots,x_m$ is called a complete residue system modulo m if for every integer y there is one and only one x_j such that $y \equiv x_j(\text{mod } m)$.

10. State Chinese Remainder Theorem.

Let $m_1,m_2,\ldots,m_r$ denote r positive integers that are relatively prime in pairs, and let $a_1,a_2,\ldots,a_r$ denote any r integers. Then the congruences

$x \equiv a_1(\text{mod } m_1)$

$x \equiv a_2(\text{mod } m_2)$

……

……

$x \equiv a_r(\text{mod } m_r)$

have common solutions. If x_0 is one such solution, then an integer x satisfies the congruences the above equations iff x is of the form $x=x_0+km$ for some integer k. Here $m=m_1m_2\ldots m_r$.

11. Define n-th power residue modulo p.

If (a, p)=1 and $x_n \equiv a$ (mod p) has a solution, then a is called an n-th power residue modulo p.

12. Define Euler's criterion.

If p is an odd prime and (q, p)=1, then $x^2 \equiv a(\text{mod } p)$ has two solutions or no solution according as $a^{(p-1)/2} \equiv$ or $\equiv -1$ (mod p).

PART-B

1. (a) Find all solutions of 10x -7y=17. **(8)**
   (b)Prove that 101x+37y=3819 has a positive solution in integers. **(8)**
2. (a) Find all solution in integers of 2x+3y+4z=5. **(8)**
   (b) Find all solution in integers of the simultaneous equations. 20x+44y+50z=10. 17x+13y+11z=19. **(8)**
3. (a) Find all solutions of the simultaneous congruence's $3x+z \equiv 1(\text{mod}(5)$, $4x-y+z \equiv 3(\text{mod}5)$ **(8)**
   (b) For what integers a, b, and c does the system of equations x+2y+3z+4w=a. x+4y+9z+16w=b. x+8y+27z+64w=c.have a solution in integers? What are the solutions if a=b=c=1? **(8)**
4. (a) The equation $15x^2-7y^2=9$ has no solution in integers. **(8)**
   (b) let f denote a polynomial with integral coefficients. If $a \equiv b(\text{mod } m)$ then $f(a) \equiv f(b) \text{mod } m$ **(8)**
5. If $x \equiv y(\text{mod } m)$, then y is called a residue of x modulo m, a set $x_1,x_2,\ldots\ldots x_n$. is called a complete

residue system modulo m if for every integer there is one and only one x_j such that $y \equiv x_j \pmod{m}$ **(16)**

6. (a) If p is a prime number and $p \equiv 1 \pmod 4$ then there exist positive integer a and b such that $a^2+b^2=p$. **(8)**
   (b) Let q be a prime factor of a^2+b^2. If $q \equiv 3 \pmod 4$ then $q \mid a$ and $q \mid b$. **(8)**
7. (a) Find the least positive integer x such that $x \equiv 5 \pmod 7$. $x \equiv 7 \pmod{11}$, and $x \equiv 3 \pmod{13}$ **(8)**
   (b) Show that there is no x for which both $x \equiv 29 \pmod{52}$ and $x \equiv 19 \pmod{72}$. **(8)**
8. (a) Determine whether the system $x \equiv 3 \pmod{10}$, $x \equiv 8 \pmod{15}$, $x \equiv 5 \pmod{84}$ has no solution, and find them all, if any exist. **(8)**
   (b) Exhibit the foregoing one to one correspondence explicitly, when $m_1=7$, $m_2=9$, $m=63$. **(8)**
9. (a) Let $f(x) = x^2+x+7$. Find all roots of congruence $f(x) \equiv 0 \pmod{15}$ **(8)**
   (b) Solve the set of congruence's: $x \equiv 1 \pmod 4$, $x \equiv 0 \pmod 3$, $x \equiv 5 \pmod 7$ **(8)**
10. (a)Find all the integers that satisfy simultaneously: $x \equiv 2 \pmod 3$, $x \equiv 3 \pmod 5$, $x \equiv 1 \pmod 7$ **(8)**
    (b)Find all the integers that give the remainders 1,2,3 when divided by 3,4,5 respectively. **(8)**
11. (a)Find the number of positive integers≤7200 that are prime to 3600. **(8)**
    (b)Solve the congruence $x^3+4x+8 \equiv 0 \pmod{15}$ **(8)**
12. (a)Solve the congruence $x^3-9x^2+23x-15 \equiv 0 \pmod{503}$ **(8)**
    (b)For any integer x, (a,b)=(b,a)=(a,-b)=(a,b+ax) **(8)**
13. (a)If (a,m)=(b,m)=1, then (ab,m)=1. **(8)**
    (b)If $b \equiv c \pmod m$, then $(b, m) = (c, m)$ **(8)**

UNIT V
CLASSICAL THEOREMS AND MULTIPLICATIVE FUNCTIONS
PART A

1. **State Wilson's theorem**
   The Wilson's theorem states that, if p is a prime, then $(p-1)! \equiv -1 \pmod p$
2. **State Fermat's theorem**.
   Let p denote a prime. If p/a then $a^{p-1} \equiv 1 \pmod p$. For every integer a, $a^p \equiv a \pmod p$.
3. **State Euler's generalization of Fermat's theorem.**
   If (a, m)=1, then $a^{\phi(m)} \equiv 1 \pmod m$.
4. **State Fermat's little theorem**
   If p is a prime and $a \not\equiv 0 \pmod p$, then $a^{p-1} \equiv 1 \pmod p$
5. **Explain the Exponent of an integer modulo n**.
   Let n be a natural number >1 and a an integer prime to n. if the infinite sequence $a, a^2, a^3, \ldots \equiv 1 \pmod n$. Suppose that a^δ is the first number in the sequence $\equiv 1 \pmod n$. then a is said to belong to the Exponent of an integer modulo n
6. **Define improper divisor of n**
   Every integer n is a divisor of itself. It is called the improper divisor of n . All other divisors of n are called proper divisors .
7. **Define Eulers Phi function**
   $\phi(n)$ is the number of non-negative integers less than n that are relatively prime to n. In other words, if $n>1$ then $\phi(n)$ is the number of elements in Un, and $\phi(1)=1$.
8. **If p is a prime, the only elements of Up which are their own inverses are [1] and [$p-1$]=[−1].**
   Note that [n] is its own inverse if and only if [$n2$]=[n]2=[1] if and only if $n2 \equiv 1 \pmod p$ if and only if $p|(n2-1)=(n-1)(n+1)$. This is true if and only if $p|(n-1)$ or $p|(n+1)$. In the first case, $n \equiv 1 \pmod p$, i.e., [n]=[1]. In the second case, $n \equiv -1 \equiv p-1 \pmod p$, i.e., [$n$]=[$p-1$].
9. **Find the remainder of 97! When divided by 101.**

First we will apply Wilson's theorem to note that $100! \equiv -1 \pmod{101}$. When we decompose the factorial, we get that: $(100)(99)(98)(97!) \equiv -1 \pmod{101}$. Now we note that $100 \equiv -1 \pmod{101}$, $99 \equiv -2 \pmod{101}$, and $98 \equiv -3 \pmod{101}$.

Hence: $(-1)(-2)(-3)(97!) \equiv -1 \pmod{101}$ $(-6)(97!) \equiv -1 \pmod{101}$ $(6)(97!) \equiv 1 \pmod{101}$. Now we want to find a modular inverse of 6 (mod 101). Using the division algorithm, we get that:
$101=6(16)+56=5(1)+11=6+5(-1)1=6+[101+6(-16)](-1)1=101(-1)+6(17)$
Hence, 17 can be used as an inverse for 6 (mod 101). It thus follows that: $(17)(6)(97!) \equiv (17)1 \pmod{101}$ $97! \equiv 17 \pmod{101}$ Hence, 97! has a remainder of 17 when divided by 101.

10. For prime $p \geq 5$, determine the remainder when $(p-4)!$ is divided by p.

By *Wilson*'s theorem, $(p-1)! \equiv -1 \pmod{p}$. Therefore
$-1 \equiv (p-1)(p-2)(p-3)\cdot(p-4)! \equiv -6\cdot(p-4)! \pmod{p}$.

If $p=6k+1$, multiplying both sides of the congruence by k gives $(p-4)! \equiv -k = -(p-1)/6 \pmod{p}$.
If $p=6k-1$, multiplying both sides of the congruence by k gives $(p-4)! \equiv k = (p+1)/6 \pmod{p}$.

11. Find the remainder of 53! when divided by 61.

We know that by Wilson's theorem $60! \equiv -1 \pmod{61}$. Decomposing 60!, we get that:
$(60)(59)(58)(57)(56)(55)(54)(53)(52)51! \equiv -1 \pmod{61}$ $(-1)(-2)(-3)(-4)(-5)(-6)(-7)(-8)(-9)51! \equiv -1 \pmod{61}$ $(-362880)51! \equiv -1 \pmod{61}$ $(362880)51! \equiv 1 \pmod{61}$ $(52)51! \equiv 1 \pmod{61}$ We will now use the division algorithm to find a modular inverse of 52 (mod 61):
$61=52(1)+952=9(5)+79=7(1)+27=2(3)+11=7+2(-3)1=7+[9+7(-1)](-3)1=9(-3)+7(4)1=9(-3)+[52+9(-5)](4)1=52(4)+9(-23)1=52(4)+[61+52(-1)](-23)1=61(-23)+52(27)$ Hence 27 can be used as an inverse (mod 61). We thus get that: $(27)(52)51! \equiv (27)1 \pmod{61}$ $51! \equiv 27 \pmod{61}$
Hence the remainder of 51! when divided by 61 is 2.

12. What is the remainder of 149! when divided by 139?

From Wilson's theorem we know that $138! \equiv -1 \pmod{139}$. We are now going to multiply both sides of the congruence until we get up to 149!:
$149! \equiv (149)(148)(147)(146)(145)(144)(143)(142)(141)(140)(139)(-1) \pmod{139}$ $149! \equiv (10)(9)(8)(7)(6)(5)(4)(3)(2)(1)(0)(-1) \pmod{139}$ $149! \equiv 0 \pmod{139}$. Hence the remainder of 149! when divided by 139 is 0.

13. Define congruence in one variable

A congruence of the form $ax \equiv b \pmod{m}$ where x is an unknown integer is called a linear congruence in one variable.

14. Let p be a prime. A positive integer m is its own inverse modulo p iff p divides m + 1 or p divides m − 1.

Suppose that m is its own inverse. Thus $m.m \equiv 1 \pmod{p}$. Hence $p \mid m^2 - 1$. then $p \mid (m-1)$ or $p \mid (m+1)$.

PART B

1. State and prove Wilson's theorem **(16)**
2. (a) For $n>2$, $\varphi(n)$ is an even integer **(8)**
   (b) Verify the equality $\varphi(n)=\varphi(n+1)=\varphi(n+2)$ holds when $n=5186$. **(8)**
3. (a) State and prove Euler's theorem **(8)**
   (b) If p is a prime, then $(p-1)! \equiv -1 \pmod{p}$ **(8)**
4. (a) If m and n are relatively prime positive integers, prove that $m^{\phi(n)} + n^{\phi(m)} \equiv 1 \pmod{mn}$. **(8)**
   (b) For any integer a, show that a and a^{4n+1} have the same last digit. **(8)**
5. (a) Using Euler's theorem to evaluate $2^{100000} \pmod{77}$ **(8)**
   (b) Find the units digit of 3^{100} by means of Euler's theorem. **(8)**
6. For any prime p, establish each of assertions below **(16)**

   (i) $\tau(p!)=2\tau((p-1)!)$
   (ii) $\sigma(p!)=(p+1)\sigma((p-1)!)$

(iii) $\varphi(p!)=(p-1)\varphi((p-1)!)$

7. (a) If p is a prime and a is a positive integer, then $\phi(pa)=pa-pa-1$ **(8)**

(b) If a and b are relatively prime and $n=ab$, then $\phi(n)=\phi(a)\phi(b)$. **(8)**

8. (a) State and prove Fermat's theorem **(8)**

(b) Given integers a, b c, gcd(a, bc)=1 iff gcd(a,b)=1 and gcd(a,c)=1 **(8)**

9. State and prove Euler generalization of Fermat's theorem **(16)**

10. State and prove Fermat's little theorem. **(16)**

11. let p be a prime number. Then $x^2 \equiv 1 (\text{mod } m)$ iff $x \equiv \pm 1 (\text{mod } p)$. **(16)**

12. If p is a prime and k>0, then $\Phi(p^k) = p^k - p^{k-1} = p^k\left(1-\frac{1}{p}\right)$ **(16)**

CS8591 COMPUTER NETWORKS

L T P C 3 0 0 3

OBJECTIVES:

• To understand the protocol layering and physical level communication.
• To analyze the performance of a network.
• To understand the various components required to build different networks.
• To learn the functions of network layer and the various routing protocols.
• To familiarize the functions and protocols of the Transport layer.

UNIT I INTRODUCTION AND PHYSICAL LAYER 9

Networks – Network Types – Protocol Layering – TCP/IP Protocol suite – OSI Model – Physical Layer: Performance – Transmission media – Switching – Circuit-switched Networks – Packet Switching.

UNIT II DATA-LINK LAYER & MEDIA ACCESS 9

Introduction – Link-Layer Addressing – DLC Services – Data-Link Layer Protocols – HDLC – PPP - Media Access Control - Wired LANs: Ethernet - Wireless LANs – Introduction – IEEE 802.11, Bluetooth – Connecting Devices.

UNIT III NETWORK LAYER 9

Network Layer Services – Packet switching – Performance – IPV4 Addresses – Forwarding of IP Packets - Network Layer Protocols: IP, ICMP v4 – Unicast Routing Algorithms – Protocols – Multicasting Basics – IPV6 Addressing – IPV6 Protocol.

UNIT IV TRANSPORT LAYER 9

Introduction – Transport Layer Protocols – Services – Port Numbers – User Datagram Protocol – Transmission Control Protocol – SCTP.

UNIT V APPLICATION LAYER 9

WWW and HTTP – FTP – Email –Telnet –SSH – DNS – SNMP.

TOTAL : 45 PERIODS

OUTCOMES:

On Completion of the course, the students should be able to:

- Understand the basic layers and its functions in computer networks.
- Evaluate the performance of a network.
- Understand the basics of how data flows from one node to another.
- Analyze and design routing algorithms.
- Design protocols for various functions in the network.
- Understand the working of various application layer protocols.

TEXT BOOK:

1. Behrouz A. Forouzan, Data Communications and Networking, Fifth Edition TMH, 2013.

REFERENCES

1. Larry L. Peterson, Bruce S. Davie, Computer Networks: A Systems Approach, Fifth Edition, Morgan Kaufmann Publishers Inc., 2012.
2. William Stallings, Data and Computer Communications, Tenth Edition, Pearson Education, 2013.
3. Nader F. Mir, Computer and Communication Networks, Second Edition, Prentice Hall, 2014.
4. Ying-Dar Lin, Ren-Hung Hwang and Fred Baker, Computer Networks: An Open Source Approach, McGraw Hill Publisher, 2011.
5. James F. Kurose, Keith W. Ross, Computer Networking, A Top-Down Approach Featuring the Internet, Sixth Edition, Pearson Education, 2013

UNIT I INTRODUCTION AND PHYSICAL LAYER

Networks – Network Types – Protocol Layering – TCP/IP Protocol suite – OSI Model Physical Layer: Performance – Transmission media – Switching – Circuit-switched Networks – Packet Switching.

NETWORKS

Connection: In networking, a connection refers to pieces of related information that are transferred through a network.
Packet: A packet is, generally speaking, the most basic unit that is transfered over a network.
Network Criteria
Performance
Performance can be measured in many ways, including transit time and response time.Transit time is the amount of time required for a message to travel from one device toanother. Response time is the elapsed time between an inquiry
and a response.Performance is often evaluated by two networking metrics: **throughput** and **delay.**We often need more throughput and less delay
Reliability
In addition to accuracy of delivery, network **reliability** is measured by the frequency offailure, the time it takes a link to recover from a failure.
Security
Network **security** issues include protecting data from unauthorized access, protecting data from damage and development, and implementing policies and procedures for recovery from breaches and data losses

Physical Structures

Type of Connection

There are two possible types of connections: point-to-point and multipoint

Point-to-Point

A **point-to-point connection** provides a dedicated link between two devices. Theentire capacity of the link is reserved for transmission between those two devices
Multipoint
A **multipoint** (also called **multidrop**) **connection** is one in which more than two specific devices share a single link

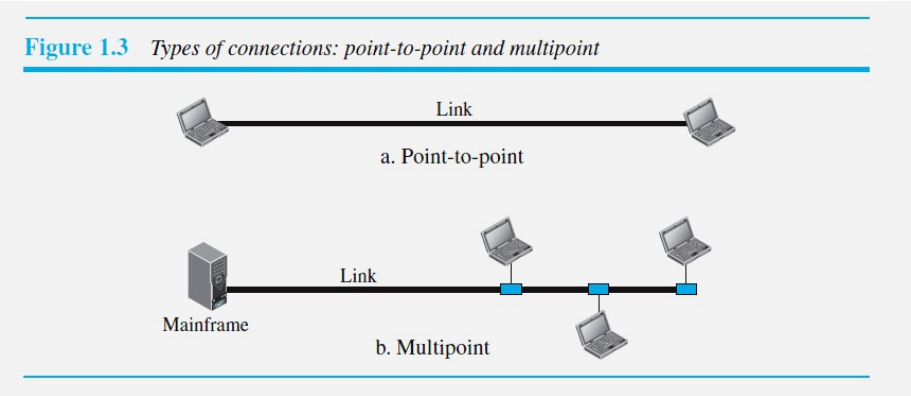

Figure 1.3 *Types of connections: point-to-point and multipoint*

PHYSICAL TOPOLOGY

Network Topology is the schematic description of a network arrangement, connecting various nodes(sender and receiver) through lines of connection.

BUS Topology

Bus topology is a network type in which every computer and network device is connected to single cable. When it has exactly two endpoints, then it is called **Linear Bus topology**.

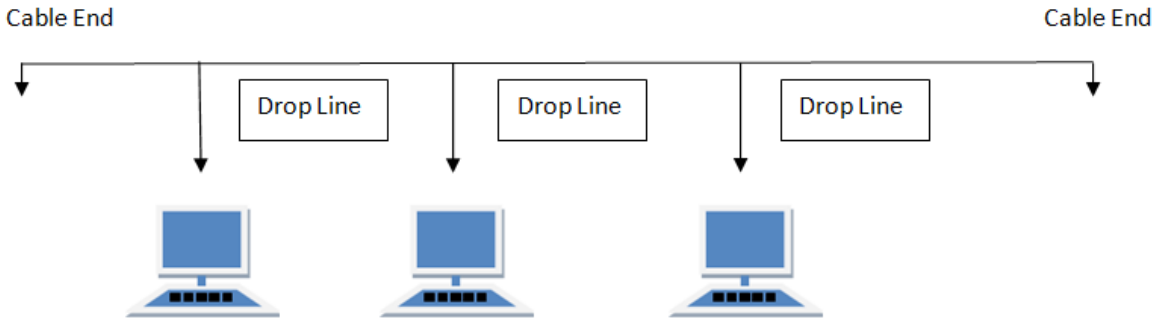

Features of Bus Topology

1. It transmits data only in one direction.
2. Every device is connected to a single cable

Advantages of Bus Topology

1. It is cost effective.
2. Cable required is least compared to other network topology.
3. Used in small networks.
4. It is easy to understand.
5. Easy to expand joining two cables together.

Disadvantages of Bus Topology

1. Cables fails then whole network fails.
2. If network traffic is heavy or nodes are more the performance of the network decreases.
3. Cable has a limited length.
4. It is slower than the ring topology.

RING Topology

It is called ring topology because it forms a ring as each computer is connected to another computer, with the last one connected to the first. Exactly two neighbours for each device.

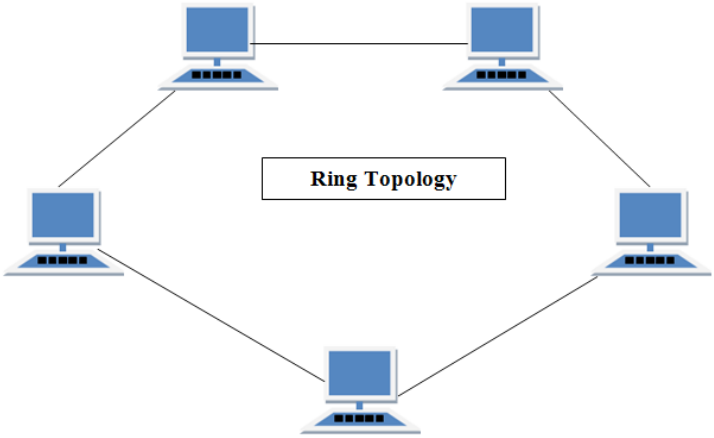

Features of Ring Topology

1. A number of repeaters are used for Ring topology with large number of nodes, because if someone wants to send some data to the last node in the ring topology with 100 nodes, then the data will have to pass through 99 nodes to reach the 100th node. Hence to prevent data loss repeaters are used in the network.
2. The transmission is unidirectional, but it can be made bidirectional by having 2 connections between each Network Node, it is called **Dual Ring Topology**.
3. In Dual Ring Topology, two ring networks are formed, and data flow is in opposite direction in them. Also, if one ring fails, the second ring can act as a backup, to keep the network up.
4. Data is transferred in a sequential manner that is bit by bit. Data transmitted, has to pass through each node of the network, till the destination node.

Advantages of Ring Topology

1. Transmitting network is not affected by high traffic or by adding more nodes, as only the nodes having tokens can transmit data.
2. Cheap to install and expand

Disadvantages of Ring Topology

1. Troubleshooting is difficult in ring topology.
2. Adding or deleting the computers disturbs the network activity.
3. Failure of one computer disturbs the whole network.

STAR Topology

In this type of topology all the computers are connected to a single hub through a cable. This hub is the central node and all others nodes are connected to the central node.

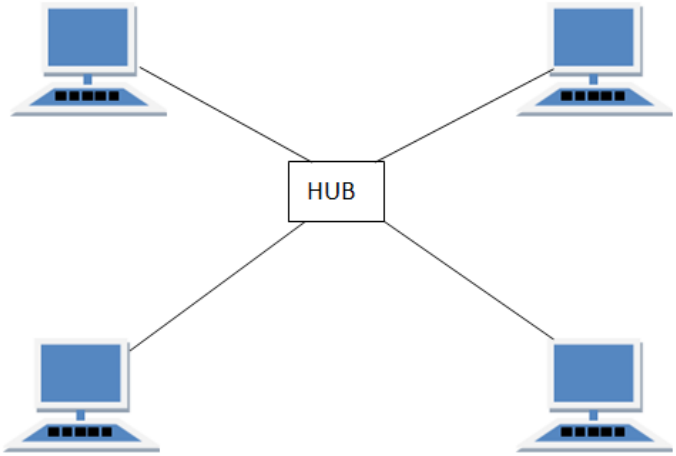

Features of Star Topology

1. Every node has its own dedicated connection to the hub.
2. Hub acts as a repeater for data flow.
3. Can be used with twisted pair, Optical Fibre or coaxial cable.

Advantages of Star Topology

1. Fast performance with few nodes and low network traffic.
2. Hub can be upgraded easily.
3. Easy to troubleshoot.
4. Easy to setup and modify.
5. Only that node is affected which has failed, rest of the nodes can work smoothly.

Disadvantages of Star Topology

1. Cost of installation is high.
2. Expensive to use.
3. If the hub fails then the whole network is stopped because all the nodes depend on the hub.
4. Performance is based on the hub that is it depends on its capacity

MESH Topology

It is a point-to-point connection to other nodes or devices. All the network nodes are connected to each other. Mesh has n(n-1)/2 physical channels to link n devices.

There are two techniques to transmit data over the Mesh topology, they are :

1. Routing
2. Flooding

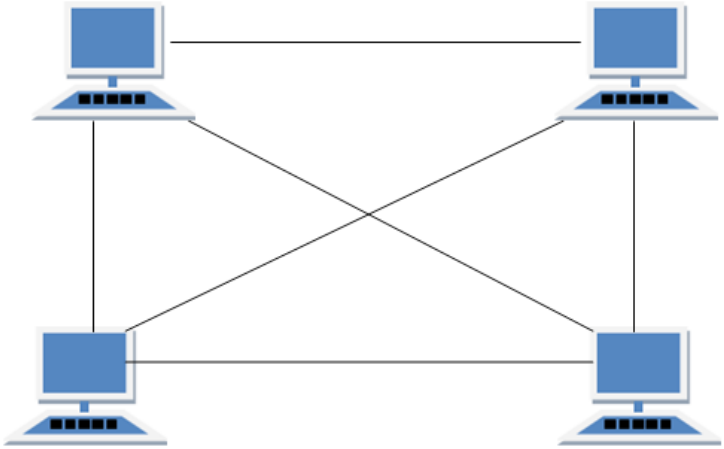

Features of Mesh Topology

1. Fully connected.
2. Robust.
3. Not flexible.

Advantages of Mesh Topology

1. Each connection can carry its own data load.
2. It is robust.
3. Fault is diagnosed easily.
4. Provides security and privacy.

Disadvantages of Mesh Topology

1. Installation and configuration is difficult.
2. Cabling cost is more.
3. Bulk wiring is required.

NETWORK TYPES

We use a few criteria such as size, geographical coverage, and ownership to make this Distinction

Local Area Network (LAN)

It is also called LAN and designed for small physical areas such as an office, group of buildings or a factory. LANs are used widely as it is easy to design and to troubleshoot. Personal computers and workstations are connected to each other through LANs. We can use different types of topologies through LAN, these are Star, Ring, Bus, Tree etc.

LAN can be a simple network like connecting two computers, to share files and network among each other while it can also be as complex as interconnecting an entire building.

LAN networks are also widely used to share resources like printers, shared hard-drive etc.

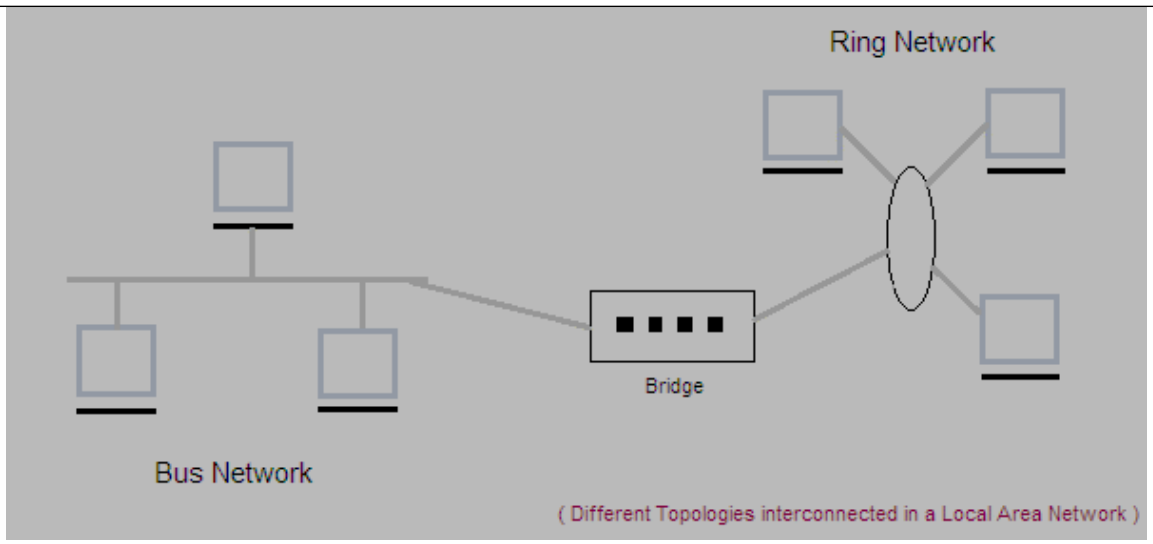

Characteristics of LAN

- LAN's are private networks, not subject to tariffs or other regulatory controls.
- LAN's operate at relatively high speed when compared to the typical WAN.
- There are different types of Media Access Control methods in a LAN, the prominent ones are Ethernet, Token ring.
- It connects computers in a single building, block or campus, i.e. they work in a restricted geographical area.

Applications of LAN

- One of the computer in a network can become a server serving all the remaining computers called clients. Software can be stored on the server and it can be used by the remaining clients.
- Connecting Locally all the workstations in a building to let them communicate with each other locally without any internet access.
- Sharing common resources like printers etc are some common applications of LAN.

Advantages of LAN

- **Resource Sharing:** Computer resources like printers, modems, DVD-ROM drives and hard disks can be shared with the help of local area networks. This reduces cost and hardware purchases.
- **Software Applications Sharing:** It is cheaper to use same software over network instead of purchasing separate licensed software for each client a network.
- **Easy and Cheap Communication:** Data and messages can easily be transferred over networked computers.
- **Centralized Data:** The data of all network users can be saved on hard disk of the server computer. This will help users to use any workstation in a network to access their data. Because data is not stored on workstations locally.
- **Data Security:** Since, data is stored on server computer centrally, it will be easy to manage data at only one place and the data will be more secure too.
- **Internet Sharing:** Local Area Network provides the facility to share a single internet connection among all the LAN users. In Net Cafes, single internet connection sharing system keeps the internet expenses cheaper.

Disadvantages of LAN

- **High Setup Cost:** Although the LAN will save cost over time due to shared computer resources, but the initial setup costs of installing Local Area Networks is high.
- **Privacy Violations:** The LAN administrator has the rights to check personal data files of each and every LAN user. Moreover he can check the internet history and computer use history of the LAN user.
- **Data Security Threat:** Unauthorised users can access important data of an organization if centralized data repository is not secured properly by the LAN administrator.
- **LAN Maintenance Job:** Local Area Network requires a LAN Administrator because, there are problems of software installations or hardware failures or cable disturbances in Local Area Network. A LAN Administrator is needed at this full time job.
- **Covers Limited Area:** Local Area Network covers a small area like one office, one building or a group of nearby buildings.

Wide Area Network (WAN)

It is also called WAN. WAN can be private or it can be public leased network. It is used for the network that covers large distance such as cover states of a country. It is not easy to design and maintain. Communication medium used by WAN are PSTN or Satellite links. WAN operates on low data rates.

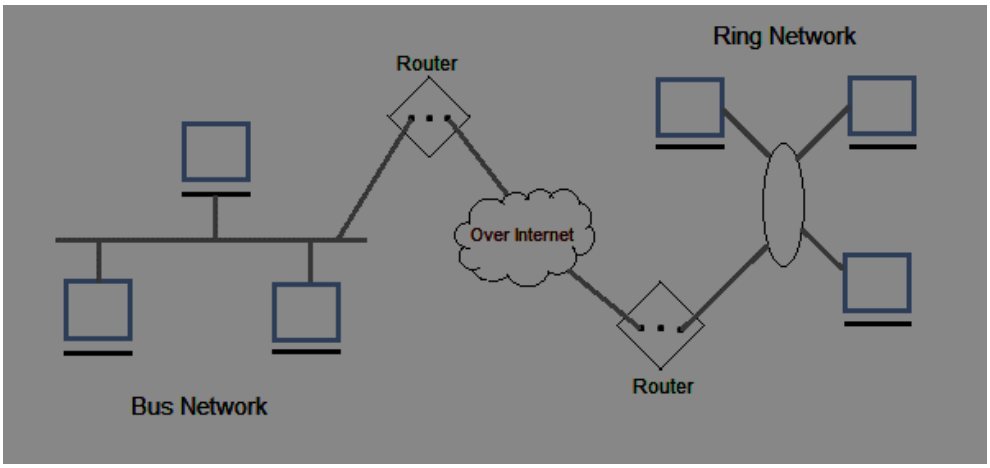

Characteristics of WAN

- It generally covers large distances(states, countries, continents).
- Communication medium used are satellite, public telephone networks which are connected by routers.

Advantages of WAN

- Covers a large geographical area so long distance business can connect on the one network.
- Shares software and resources with connecting workstations.
- Messages can be sent very quickly to anyone else on the network. These messages can have picture, sounds or data included with them(called attachments).
- Expensive things(such as printers or phone lines to the internet) can be shared by all the computers on the network without having to buy a different peripheral for each computer.
- Everyone on the network can use the same data. This avoids problems where some users may have older information than others.

Disadvantages of WAN

- Need a good firewall to restrict outsiders from entering and disrupting the network.
- Setting up a network can be an expensive, slow and complicated. The bigger the network the more expensive it is.
- Once set up, maintaining a network is a full-time job which requires network supervisors and technicians to be employed.
- Security is a real issue when many different people have the ability to use information from other computers. Protection against hackers and viruses adds more complexity and expense.

PROTOCOL LAYERING

Principles of Protocol Layering

First Principle

The first principle dictates that if we want bidirectional communication, we need to make each layer so that it is able to perform two opposite tasks, one in each direction

Second Principle

The second principle that we need to follow in protocol layering is that the two objects under each layer at both sites should be identical

Logical Connections

After following the above two principles, we can think about logical connection between each layer as shown in Figure

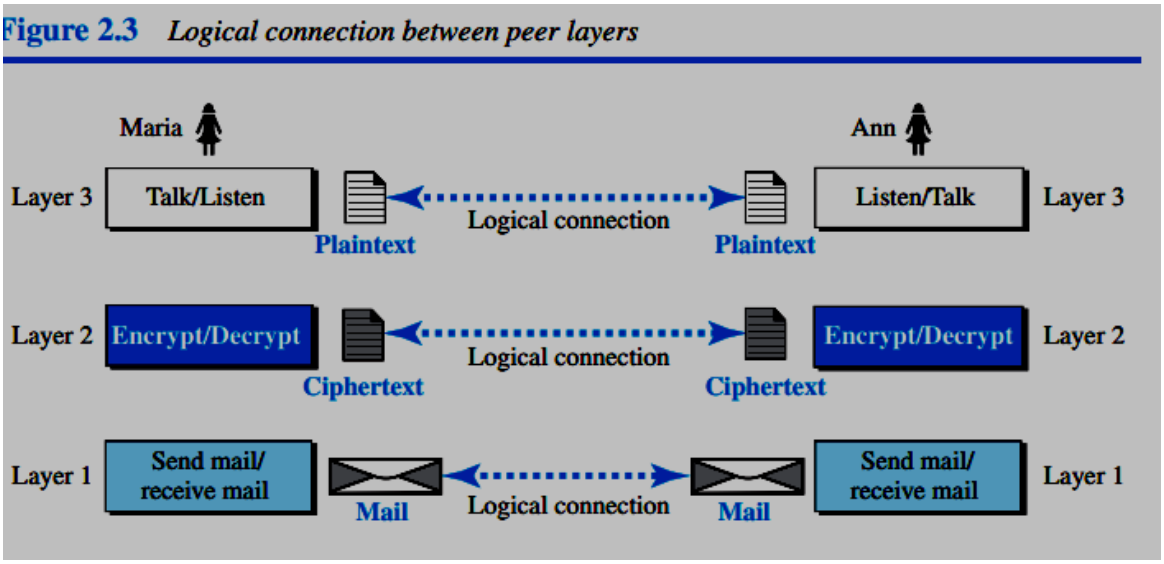

TCP/IP PROTOCOL SUITE

TCP/IP (Transmission Control Protocol/Internet Protocol). TCP/IP is a protocol suite (a set of protocols organized in different layers) used in the Internet today

Layered Architecture

To show how the layers in the TCP/IP protocol suite are involved in communication between two hosts, we assume that we want to use the suite in a small internet made up of three LANs (links), each with a link-layer switch. We also assume that the links are connected by one router, as shown in Figure

Figure 2.4 *Layers in the TCP/IP protocol suite*

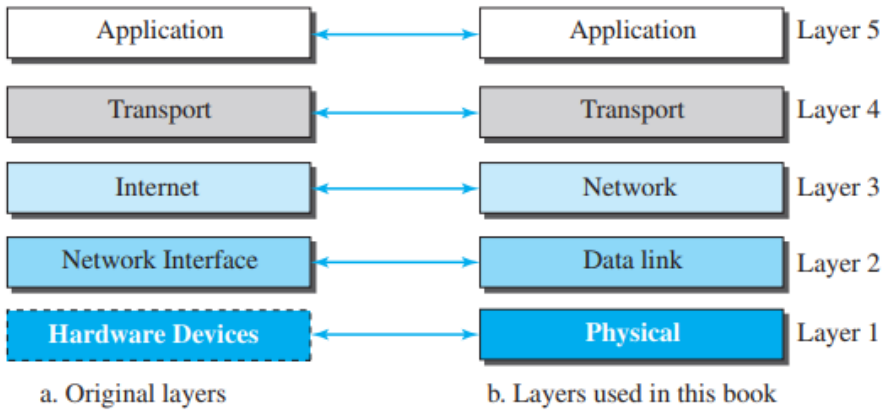

Figure 2.5 *Communication through an internet*

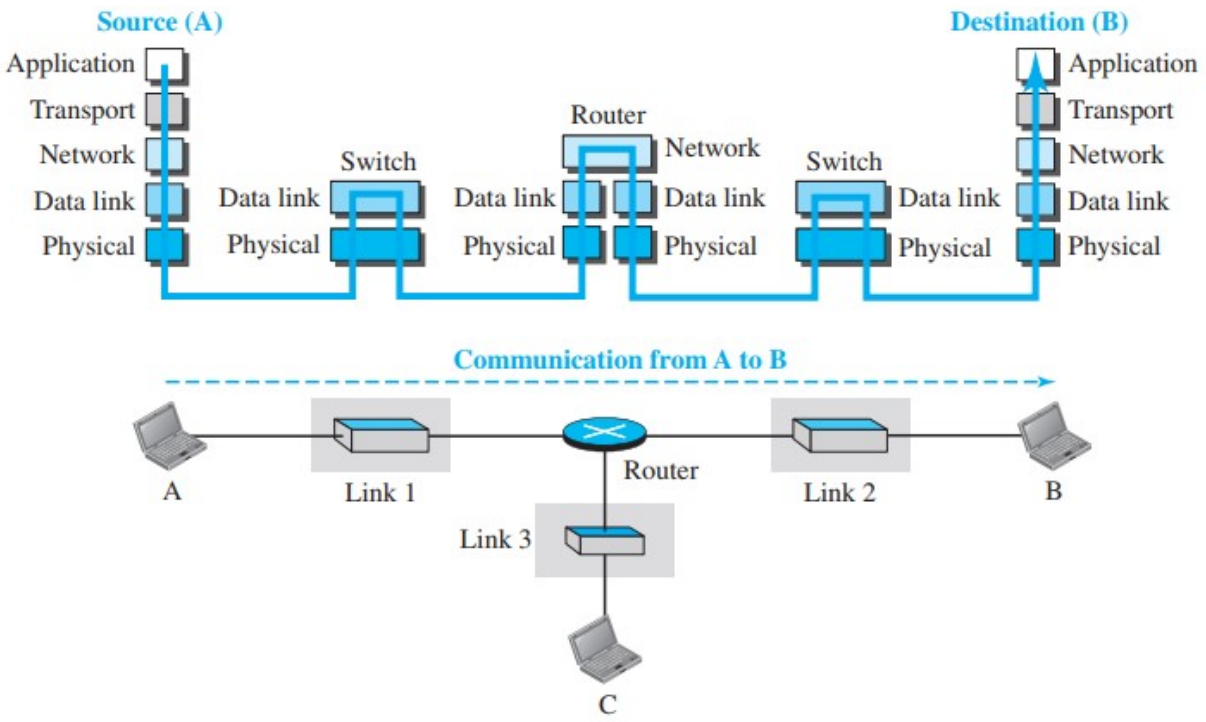

Layers in the TCP/IP Protocol Suite

Figure shows logical connections in our simple internet.

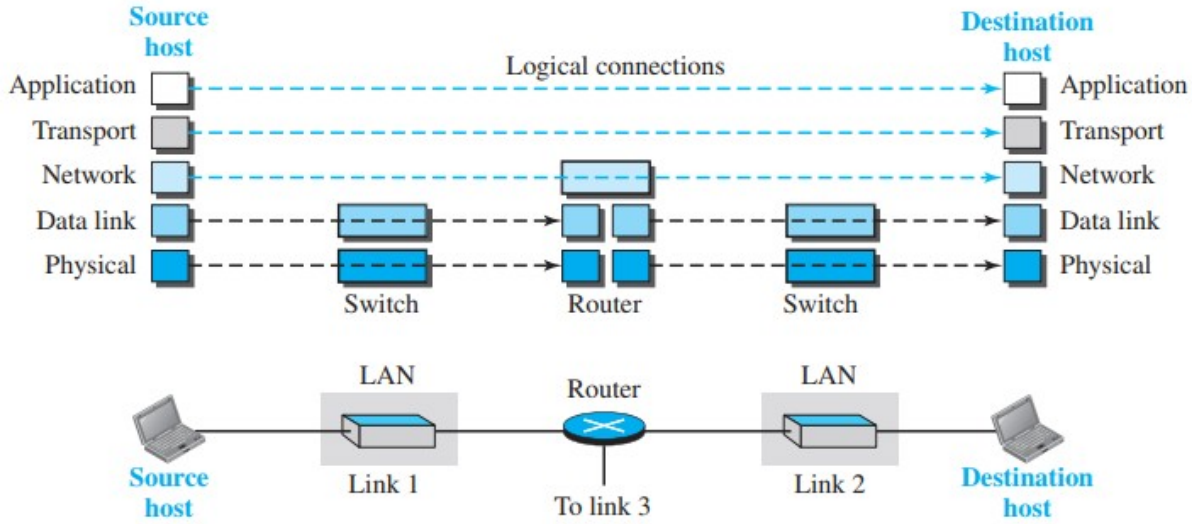

Description of Each Layer

Physical Layer

We can say that the physical layer is responsible for carrying individual bits in a frame across the link.

Data-link Layer

We have seen that an internet is made up of several links (LANs and WANs) connected by routers. There may be several overlapping sets of links that a datagram can travel from the host to the destination. The routers are responsible for choosing the best links. However, when the next link to travel is determined by the router, the data-link layer is responsible for taking the datagram and moving it across the link. The link can be a wired LAN with a link-layer switch, a wireless LAN, a wired WAN, or a wireless WAN. We can also have different protocols used with any link type. In each case, the data-link layer is responsible for moving the packet through the link

Network Layer

The network layer is responsible for creating a connection between the source computer and the destination computer. The communication at the network layer is host-to-host. The network layer in the Internet includes the main protocol, Internet Protocol (IP), that defines the format of the packet, called a datagram at the network layer. IP also defines the format and the structure of addresses used in this layer. IP is also responsible for routing a packet from its source to its destination, which is achieved by each router forwarding the datagram to the next router in its path.

The network layer also has some auxiliary protocols that help IP in its delivery and routing tasks. The Internet Control Message Protocol (ICMP) helps IP to report some problems when routing a packet. The Internet Group Management Protocol (IGMP) is another protocol that helps IP in multitasking. The Dynamic Host Configuration Protocol (DHCP) helps IP to get the network-layer address for a host

Transport Layer

The logical connection at the transport layer is also end-to-end. The transport layer at the source host gets the message from the application layer, encapsulates it in a transportlayer packet (called a segment or a user datagram in different protocols) and sends it, through the logical (imaginary) connection, to the transport layer at the destination hos

The main protocol, Transmission Control Protocol (TCP), is a
connection-oriented protocol that first establishes a logical connection between transport layers at two hosts before transferring data
The other
common protocol, User Datagram Protocol (UDP), is a connectionless protocol that
transmits user datagrams without first creating a logical connection
Application Layer
The Hypertext Transfer Protocol (HTTP) is a vehicle for accessing the World
Wide Web (WWW). The Simple Mail Transfer Protocol (SMTP) is the main protocol
used in electronic mail (e-mail) service. The File Transfer Protocol (FTP) is used for
transferring files from one host to another. The Terminal Network (TELNET) and
Secure Shell (SSH) are used for accessing a site remotely. The Simple Network Management
Protocol (SNMP) is used by an administrator to manage the Internet at global
and local levels. The Domain Name System (DNS) is used by other protocols to find
the network-layer address of a computer. The Internet Group Management Protocol
(IGMP) is used to collect membership in a group

Encapsulation and Decapsulation

One of the important concepts in protocol layering in the Internet is encapsulation/ decapsulation

Figure 2.8 *Encapsulation/Decapsulation*

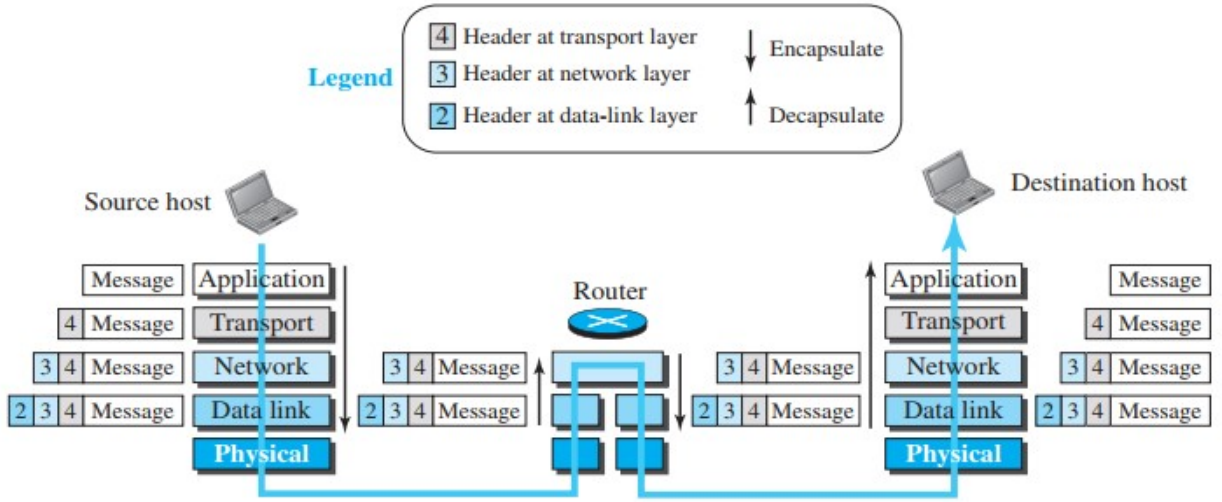

Decapsulation at the Destination Host

At the destination host, each layer only decapsulates the packet received, removes the
payload, and delivers the payload to the next-higher layer protocol until the message
reaches the application layer.

Addressing

Any communication that involves two parties needs two addresses:
source address and destination address

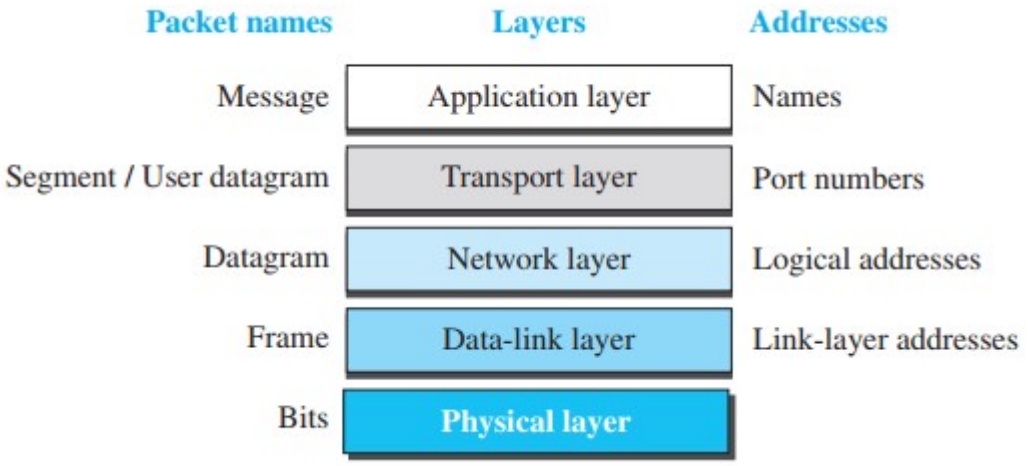

Multiplexing and Demultiplexing

Since the TCP/IP protocol suite uses several protocols at some layers, we can say that we have multiplexing at the source and demultiplexing at the destination. Multiplexing in this case means that a protocol at a layer can encapsulate a packet from several next-higher layer protocols (one at a time); demultiplexing means that a protocol can decapsulate and deliver a packet to several next-higher layer protocols

Figure 2.10 *Multiplexing and demultiplexing*

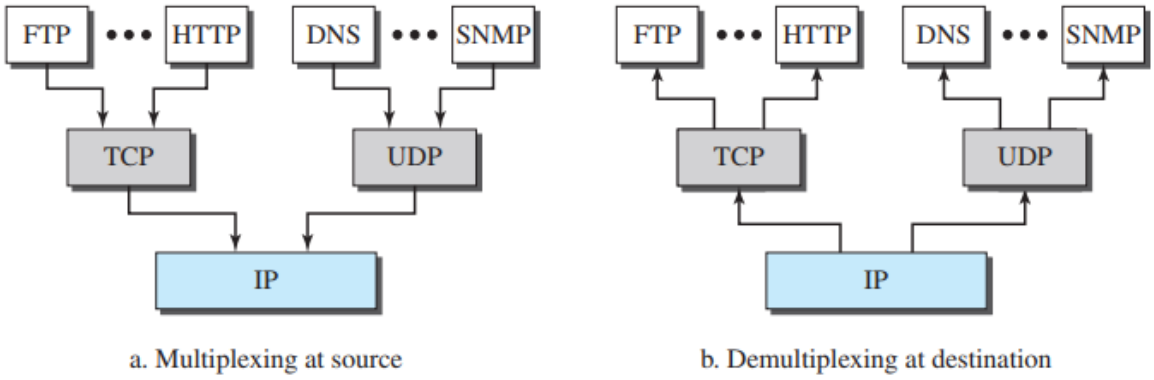

TRANSMISSION MEDIA

A **transmission medium** can be broadly defined as anything that can carry information from a source to a destination.

Figure 7.2 *Classes of transmission media*

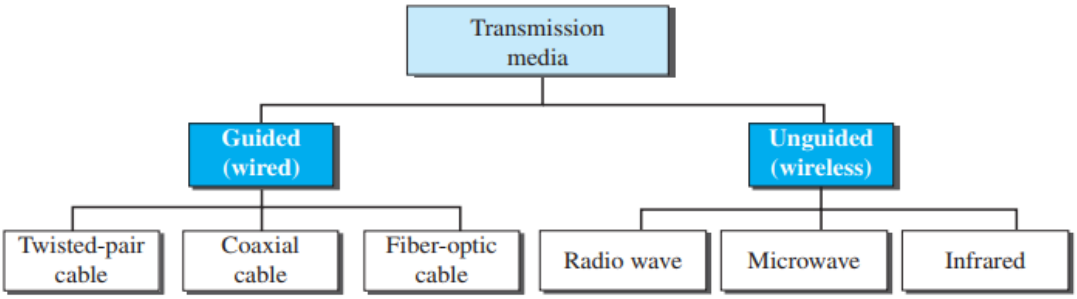

GUIDEDMEDIA

Guided media, which are those that provide a conduit from one device to another, include **twisted-pair cable, coaxial cable,** and **fiber-optic cable.** A signal traveling along any of these media is directed and contained by the physical limits of the medium. Twisted-pair and coaxial cable use metallic (copper) conductors that accept and transport signals in the form of electric current. **Optical fiber** is a cable that accepts and transports signals in the form of light

Figure 7.1 *Transmission medium and physical layer*

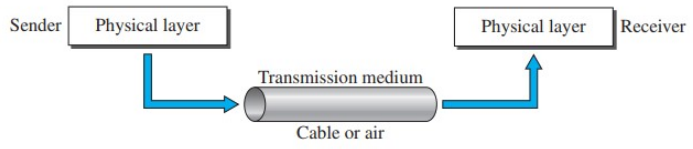

Twisted-Pair Cable

A twisted pair consists of two conductors (normally copper), each with its own plastic insulation, twisted together, as shown in Figure

Figure 7.3 *Twisted-pair cable*

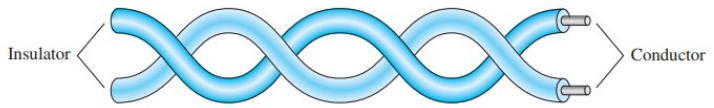

One of the wires is used to carry signals to the receiver, and the other is used only as a ground reference. The receiver uses the difference between the two.

Coaxial Cable

Coaxial cable (or coax) carries signals of higher frequency ranges than those in twistedpair cable, in part because the two media are constructed quite differently. Instead of having two wires, coax has a central core conductor of solid or stranded wire (usually copper) enclosed in an insulating sheath, which is, in turn, encased in an outer conductor of metal foil, braid, or a combination of the two. The outer metallic wrapping serves both as a shield against noise and as the second conductor, which completes the circuit. This outer conductor is also enclosed in an insulating sheath, and the whole cable is protected by a plastic cover

Figure 7.7 *Coaxial cable*

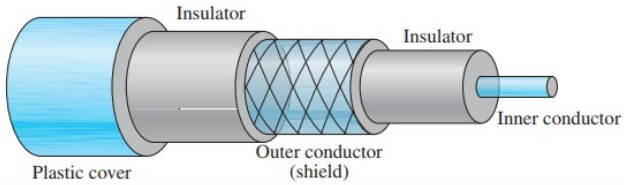

The most common type of connector used today is the Bayonet Neill-Concelman (BNC) connector

Figure 7.8 *BNC connectors*

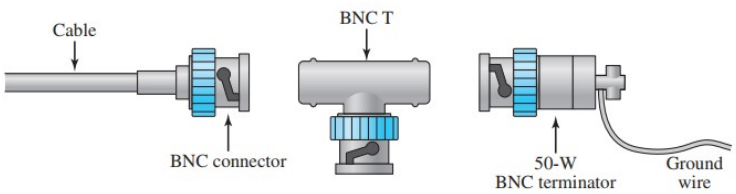

Applications

Coaxial cable was widely used in analog telephone networks where a single coaxial network could carry 10,000 voice signals. Later it was used in digital telephone networks where a single coaxial cable could carry digital data up to 600 Mbps. However, coaxial cable in telephone networks has largely been replaced today with fiberoptic cable.

Cable TV networks also use coaxial cables. In the traditional cable TV network, the entire network used coaxial cable. Later, however, cable TV providers replaced most of the media with fiber-optic cable; hybrid networks use coaxial cable only at the network boundaries, near the consumer premises. Cable TV uses RG-59 coaxial cable. Another common application of coaxial cable is in traditional Ethernet LANs

Fiber-Optic Cable

A fiber-optic cable is made of glass or plastic and transmits signals in the form of light. Optical fibers use reflection to guide light through a channel. A glass or plastic core is surrounded by a cladding of less dense glass or plastic. The difference in density of the two materials must be such that a beam of light moving through the core is reflected off the cladding instead of being refracted into it.

Figure 7.11 *Optical fiber*

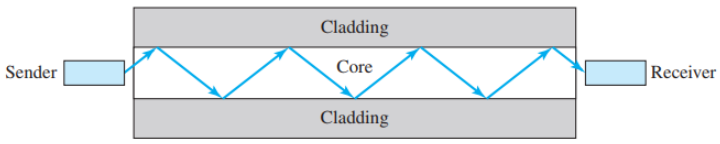

Applications

Fiber-optic cable is often found in backbone networks because its wide bandwidth is cost-effective. Today, with wavelength-division multiplexing (WDM), we can transfer data at a rate of 1600 Gbps.

Advantages and Disadvantages of Optical Fiber

Advantages

Fiber-optic cable has several advantages over metallic cable (twisted-pair or coaxial).

❑ **Higher bandwidth.** Fiber-optic cable can support dramatically higher bandwidths (and hence data rates) than either twisted-pair or coaxial cable. Currently, data rates and bandwidth utilization over fiber-optic cable are limited not by the medium but by the signal generation and reception technology available.

❑ **Less signal attenuation.** Fiber-optic transmission distance is significantly greater than that of other guided media. A signal can run for 50 km without requiring regeneration. We need repeaters every 5 km for coaxial or twisted-pair cable.

❑ **Immunity to electromagnetic interference.** Electromagnetic noise cannot affect fiber-optic cables.

❑ **Resistance to corrosive materials.** Glass is more resistant to corrosive materials than copper.

❑ **Light weight.** Fiber-optic cables are much lighter than copper cables.

❑ **Greater immunity to tapping.** Fiber-optic cables are more immune to tapping than copper cables. Copper cables create antenna effects that can easily be tapped.

Disadvantages

There are some disadvantages in the use of optical fiber.

❑ **Installation and maintenance.** Fiber-optic cable is a relatively new technology. Its installation and maintenance require expertise that is not yet available everywhere.

❑ **Unidirectional light propagation.** Propagation of light is unidirectional. If we need bidirectional communication, two fibers are needed.

❑ **Cost.** The cable and the interfaces are relatively more expensive than those of other guided media. If the demand for bandwidth is not high, often the use of optical fiber cannot be justified.

UNGUIDED MEDIA WIRELESS

Unguided medium transport electromagnetic waves without using a physical conductor. This type of communication is often referred to as ***wireless communication*.** Signals are normally broadcast through free space and thus are available to anyone who has a device capable of receiving them.

Figure 7.17 *Electromagnetic spectrum for wireless communication*

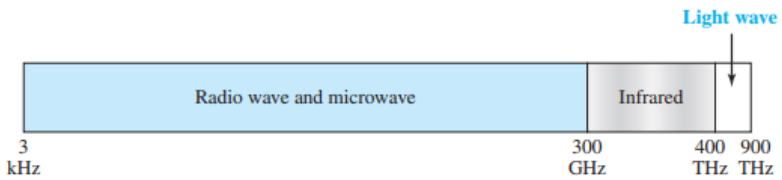

Radio Waves

Although there is no clear-cut demarcation between radio waves and microwaves, electromagnetic waves ranging in frequencies between 3 kHz and 1 GHz are normally called **radio waves;** waves ranging in frequencies between 1 and 300 GHz are called **microwaves.** Radio waves, for the most part, are omnidirectional. When an antenna transmits radio waves, they are propagated in all directions. This means that the sending and receiving antennas do not have to be aligned

Omnidirectional Antenna

Radio waves use **omnidirectional antennas** that send out signals in all directions

Figure 7.19 *Omnidirectional antenna*

Applications

The omnidirectional characteristics of radio waves make them useful for multicasting,

in which there is one sender but many receivers. AM and FM radio, television, maritime radio, cordless phones, and paging are examples of multicasting.

Microwaves

Electromagnetic waves having frequencies between 1 and 300 GHz are called microwaves. Microwaves are unidirectional. When an antenna transmits microwaves, they can be narrowly focused. This means that the sending and receiving antennas need to be aligned. Very high-frequency microwaves cannot penetrate walls. This characteristic can be a disadvantage if receivers are inside buildings

Unidirectional Antenna

Microwaves need **unidirectional antennas** that send out signals in one direction. Two types of antennas are used for microwave communications: the parabolic dish and the horn

Figure 7.20 *Unidirectional antennas*

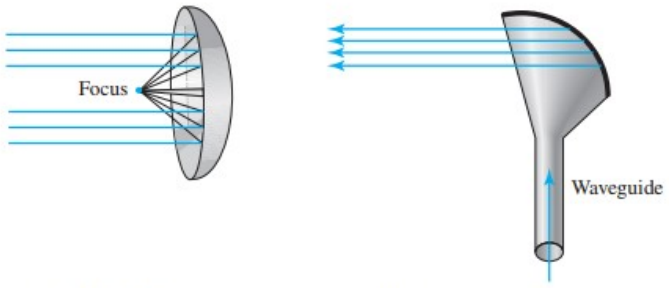

a. Parabolic dish antenna b. Horn antenna

Applications

Microwaves, due to their unidirectional properties, are very useful when unicast (oneto-one) communication is needed between the sender and the receiver. They are used in cellular phones satellite networks and wireless LANs

Infrared

Infrared waves, with frequencies from 300 GHz to 400 THz (wavelengths from 1 mm to 770 nm), can be used for short-range communication. Infrared waves, having high frequencies, cannot penetrate walls

Applications

Infrared signals can be used for short-range communication

OSI MODEL

International Organization for Standardization (ISO) is a multinational body dedicated to worldwide agreement on international standards. Almost three-fourths of the countries in the world are represented in the ISO. An ISO standard that covers all aspects of network communications is the **Open Systems Interconnection (OSI) model.**

ISO is the organization; OSI is the model

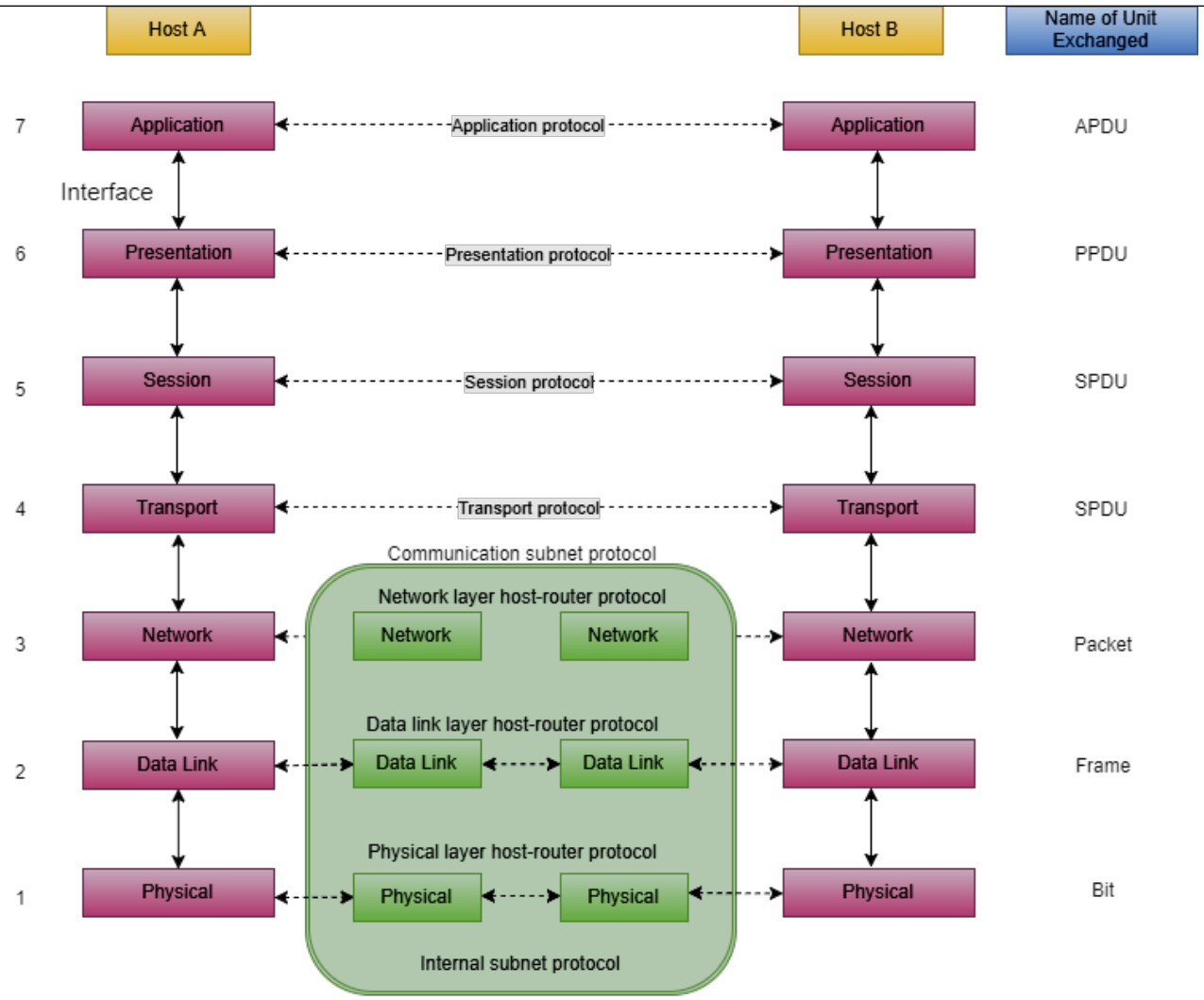

Layer	Name of Protocol	Name of Unit exchanged
Application	Application Protocol	APDU - Application Protocol Data Unit
Presentation	Presentation Protocol	PPDU - Presentation Protocol Data Unit
Session	Session Protocol	SPDU - Session Protocol Data Unit
Transport	Transport Protocol	TPDU - Transport Protocol Data Unit
Network	Network layer host-router Protocol	Packet
Data LInk	Data link layer host-router Protocol	Frame
Physical	Physical layer host-router Protocol	Bit

1. Physical Layer (Layer 1) :

The lowest layer of the OSI reference model is the physical layer. It is responsible for the actual physical connection between the devices. The physical layer contains information in the form of bits. It is responsible for the actual physical connection between the devices. When receiving data, this layer will get the signal received and convert it into 0s and 1s and send them to the Data Link layer, which will put the frame back together.

The functions of the physical layer are :

Bit synchronization: The physical layer provides the synchronization of the bits by providing a clock. This clock controls both sender and receiver thus providing synchronization at bit level.
Bit rate control: The Physical layer also defines the transmission rate i.e. the number of bits sent per second.
Physical topologies: Physical layer specifies the way in which the different, devices/nodes are arranged in a network i.e. bus, star or mesh topolgy.
Transmission mode: Physical layer also defines the way in which the data flows between the two connected devices. The various transmission modes possible are: Simplex, half-duplex and full-duplex.
* Hub, Repeater, Modem, Cables are Physical Layer devices.
** Network Layer, Data Link Layer and Physical Layer are also known as Lower Layers or Hardware Layers.

2. Data Link Layer (DLL) (Layer 2) :
The data link layer is responsible for the node to node delivery of the message. The main function of this layer is to make sure data transfer is error free from one node to another, over the physical layer. When a packet arrives in a network, it is the responsibility of DLL to transmit it to the Host using its MAC address.
Data Link Layer is divided into two sub layers :

Logical Link Control (LLC)
Media Access Control (MAC)
The packet received from Network layer is further divided into frames depending on the frame size of NIC(Network Interface Card). DLL also encapsulates Sender and Receiver's MAC address in the header.

The Receiver's MAC address is obtained by placing an ARP(Address Resolution Protocol) request onto the wire asking "Who has that IP address?" and the destination host will reply with its MAC address.

The functions of the data Link layer are :

Framing: Framing is a function of the data link layer. It provides a way for a sender to transmit a set of bits that are meaningful to the receiver. This can be accomplished by attaching special bit patterns to the beginning and end of the frame.
Physical addressing: After creating frames, Data link layer adds physical addresses (MAC address) of sender and/or receiver in the header of each frame.
Error control: Data link layer provides the mechanism of error control in which it detects and retransmits damaged or lost frames.
Flow Control: The data rate must be constant on both sides else the data may get corrupted thus , flow control coordinates that amount of data that can be sent before receiving acknowledgement.
Access control: When a single communication channel is shared by multiple devices, MAC sub-layer of data link layer helps to determine which device has control over the channel at a

given time.
* Packet in Data Link layer is referred as Frame.
** Data Link layer is handled by the NIC (Network Interface Card) and device drivers of host machines.
*** Switch & Bridge are Data Link Layer devices.

3. Network Layer (Layer 3) :
Network layer works for the transmission of data from one host to the other located in different networks. It also takes care of packet routing i.e. selection of the shortest path to transmit the packet, from the number of routes available. The sender & receiver's IP address are placed in the header by network layer.
The functions of the Network layer are :

Routing: The network layer protocols determine which route is suitable from source to destination. This function of network layer is known as routing.
Logical Addressing: In order to identify each device on internetwork uniquely, network layer defines an addressing scheme. The sender & receiver's IP address are placed in the header by network layer. Such an address distinguishes each device uniquely and universally.
* Segment in Network layer is referred as Packet.

** Network layer is implemented by networking devices such as routers.

4. Transport Layer (Layer 4) :
Transport layer provides services to application layer and takes services from network layer. The data in the transport layer is referred to as Segments. It is responsible for the End to End delivery of the complete message. Transport layer also provides the acknowledgment of the successful data transmission and re-transmits the data if an error is found.
• At sender's side:
Transport layer receives the formatted data from the upper layers, performs Segmentation and also implements Flow & Error control to ensure proper data transmission. It also adds Source and Destination port number in its header and forwards the segmented data to the Network Layer.
Note: The sender need to know the port number associated with the receiver's application.
Generally, this destination port number is configured, either by default or manually. For example, when a web application makes a request to a web server, it typically uses port number 80, because this is the default port assigned to web applications. Many applications have default port assigned.
• At receiver's side:
Transport Layer reads the port number from its header and forwards the Data which it has received to the respective application. It also performs sequencing and reassembling of the segmented data.

The functions of the transport layer are :

Segmentation and Reassembly: This layer accepts the message from the (session) layer , breaks the message into smaller units . Each of the segment produced has a header associated with it. The transport layer at the destination station reassembles the message.
Service Point Addressing: In order to deliver the message to correct process, transport layer header includes a type of address called service point address or port address. Thus by specifying this address, transport layer makes sure that the message is delivered to the correct process.
The services provided by transport layer :

Connection Oriented Service: It is a three-phase process which include
– Connection Establishment
– Data Transfer
– Termination / disconnection
In this type of transmission, the receiving device sends an acknowledgment, back to the source after a packet or group of packet is received. This type of transmission is reliable and secure.
Connection less service: It is a one phase process and includes Data Transfer. In this type of transmission, the receiver does not acknowledge receipt of a packet. This approach allows for much faster communication between devices. Connection oriented Service is more reliable than connection less Service.
* Data in the Transport Layer is called as Segments.
** Transport layer is operated by the Operating System. It is a part of the OS and communicates with the Application Layer by making system calls.
Transport Layer is called as Heart of OSI model.

5. Session Layer (Layer 5) :
This layer is responsible for establishment of connection, maintenance of sessions, authentication and also ensures security.
The functions of the session layer are :

Session establishment, maintenance and termination: The layer allows the two processes to establish, use and terminate a connection.
Synchronization : This layer allows a process to add checkpoints which are considered as synchronization points into the data. These synchronization point help to identify the error so that the data is re-synchronized properly, and ends of the messages are not cut prematurely and data loss is avoided.
Dialog Controller : The session layer allows two systems to start communication with each other in half-duplex or full-duplex.
**All the below 3 layers(including Session Layer) are integrated as a single layer in TCP/IP model as “Application Layer”.
**Implementation of these 3 layers is done by the network application itself. These are also known as Upper Layers or Software Layers.

6. Presentation Layer (Layer 6) :
Presentation layer is also called the Translation layer.The data from the application layer is extracted here and manipulated as per the required format to transmit over the network.
The functions of the presentation layer are :

Translation : For example, ASCII to EBCDIC.
Encryption/ Decryption : Data encryption translates the data into another form or code. The encrypted data is known as the cipher text and the decrypted data is known as plain text. A key value is used for encrypting as well as decrypting data.
Compression: Reduces the number of bits that need to be transmitted on the network.

7. Application Layer (Layer 7) :
At the very top of the OSI Reference Model stack of layers, we find Application layer which is implemented by the network applications. These applications produce the data, which has to be transferred over the network. This layer also serves as a window for the application services to access the network and for displaying the received information to the user.
Ex: Application – Browsers, Skype Messenger etc.
**Application Layer is also called as Desktop Layer.

The functions of the Application layer are :

Network Virtual Terminal
FTAM-File transfer access and management
Mail Services
Directory Services
OSI versus TCP/IP
When we compare the two models, we find that two layers, session and presentation, are missing from the TCP/IP protocol suite. These two layers were not added to the TCP/IP protocol suite after the publication of the OSI model.

Figure 2.12 *TCP/IP and OSI model*

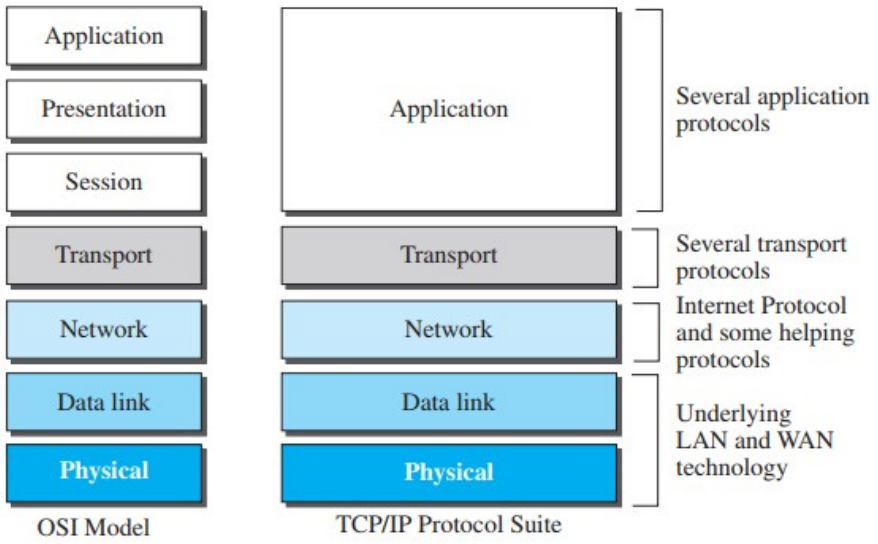

SWITCHING

An internet is a switched network in which a switch connects at least two links together. A switch needs to forward data from a network to another network when required. The two most common types of switched networks are circuit-switched and packet-switched networks

Circuit switching and packet switching are the two switching methods that are used to connect the multiple communicating devices with one another. Circuit Switching was particularly designed for voice communication and it was less suitable for data transmission. So, a better solution evolved for data transmission called Packet switching. The main difference between circuit switching and packet switching is that **Circuit Switching** is **connection oriented** whereas, **Packet Switching** is **connectionless**.

THE INTERNET

Backbones and provider networks are also called Internet Service Providers

(ISPs). The backbones are often referred to as international ISPs; the provider networks are often referred to as national or regional ISPs.

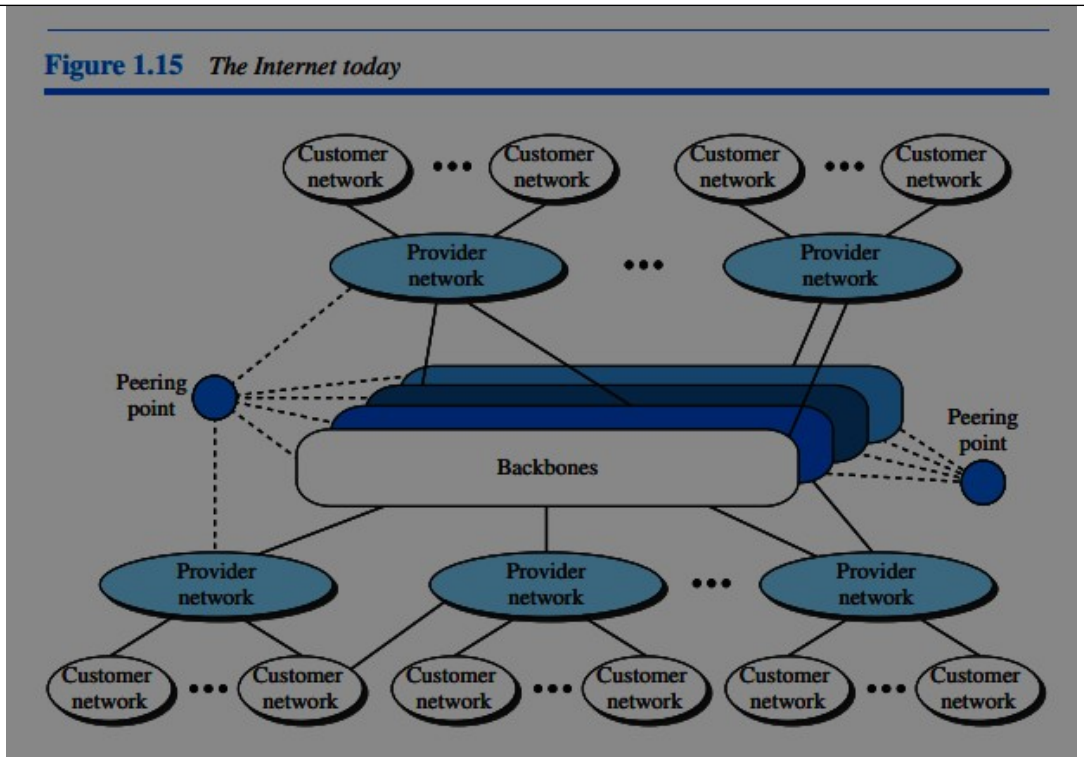

Figure 1.15 *The Internet today*

Accessing the Internet

Dial-up service. The first solution is to add to the telephone line a modem that converts data to voice. The software installed on the computer dials the ISP and imitates making a telephone connection.

DSL Service. Since the advent of the Internet, some telephone companies have upgraded their telephone lines to provide higher speed Internet services to residences or small businesses.

Using Cable Networks :More and more residents over the last two decades have begun using cable TV services instead of antennas to receive TV broadcasting.

SWITCHING

Switched communication networks are those in which data transferred from source to destination is routed between various intermediate nodes. Switching is the technique by which nodes control or switch data to transmit it between specific points on a network. There are 3 common switching techniques:

Circuit Switching

Packet Switching

Message Switching

Message Switching

Message switching was a technique developed as an alternate to circuit switching, before packet switching was introduced. In message switching, end users communicate by sending

and receiving messages that included the entire data to be shared. Messages are the smallest individual unit.

Also, the sender and receiver are not directly connected. There are a number of intermediate nodes transfer data and ensure that the message reaches its destination.

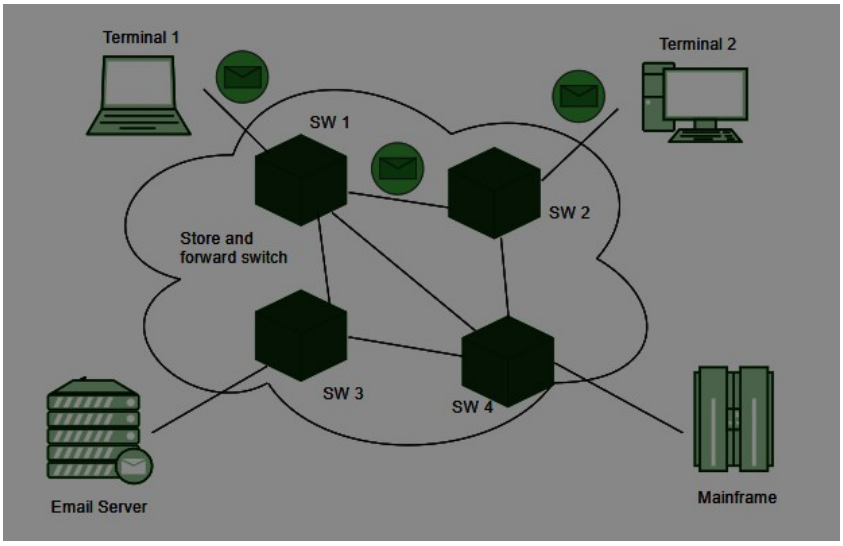

Figure 8.1 *Switched network*

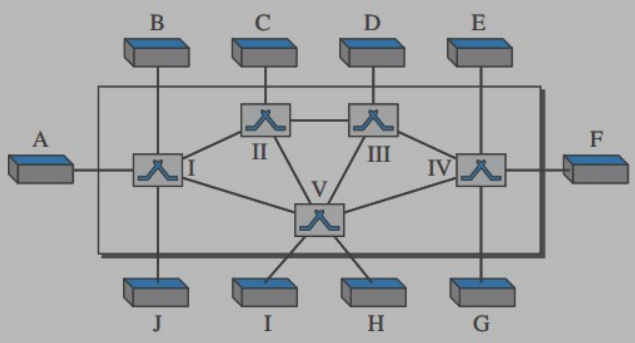

The **end systems** (communicating devices) are labeled A, B, C, D, and so on, and the switches are labeled I, II, III, IV, and V. Each switch is connected to multiple links.

Figure 8.2 *Taxonomy of switched networks*

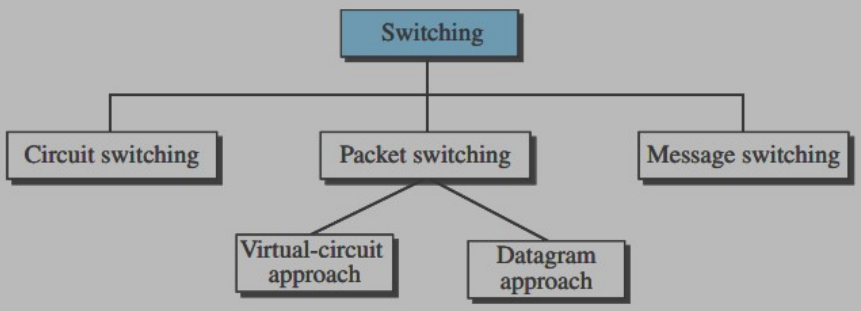

Circuit Switching

In circuit switching network resources (bandwidth) is divided into pieces and bit delay is constant during a connection. The dedicated path/circuit established between sender and

receiver provides a guaranteed data rate. Data can be transmitted without any delays once the circuit is established.

Three Phases The actual communication in a circuit-switched network requires three phases: connection setup, data transfer, and connection teardown.

Setup Phase

Before the two parties (or multiple parties in a conference call) can communicate, a dedicated circuit (combination of channels in links) needs to be established

Data-Transfer Phase

After the establishment of the dedicated circuit (channels), the two parties can transfer data. Teardown Phase

When one of the parties needs to disconnect, a signal is sent to each switch to release the resources.

PACKET SWITCHING

Packet switching is a method of transferring the data to a network in form of packets. In order to transfer the file fast and efficient manner over the network and minimize the transmission latency, the data is broken into small pieces of variable length, called **Packet**. At the destination, all these small-parts (packets) has to be reassembled, belonging to the same file

Advantage of Packet Switching over Circuit Switching :

- More efficient in terms of bandwidth, since the concept of reserving circuit is not there.
- Minimal transmission latency.
- More reliable as destination can detect the missing packet.
- More fault tolerant because packets may follow different path in case any link is down, Unlike Circuit Switching.
- Cost effective and comparatively cheaper to implement.

Disadvantage of Packet Switching over Circuit Switching :

- Packet Switching don't give packets in order, whereas Circuit Switching provides ordered delivery of packets because all the packets follow the same path.
- Since the packets are unordered, we need to provide sequence numbers to each packet.
- Complexity is more at each node because of the facility to follow multiple path.
- Transmission delay is more because of rerouting.
- Packet Switching is beneficial only for small messages, but for bursty data (large messages) Circuit Switching is better.

Datagram Networks

In a datagram network, each packet is treated independently of all others. Even if a packet is part of a multipacket transmission, the network treats it as though it existed alone. Packets in this approach are referred to as datagrams. Datagram switching is normally done at the network layer.

Figure 8.7 *A datagram network with four switches (routers)*

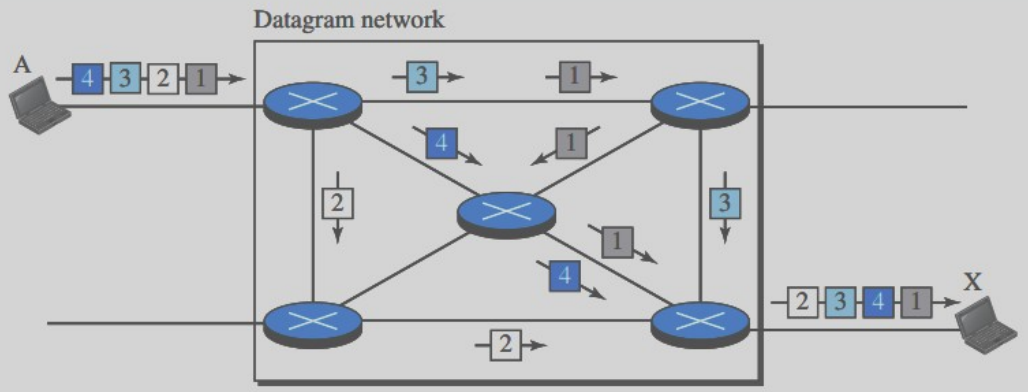

Routing Table

Figure 8.8 *Routing table in a datagram network*

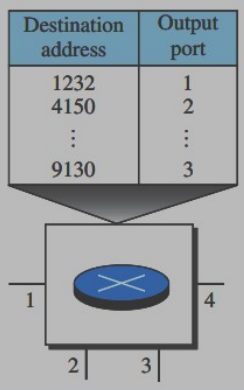

Destination address	Output port
1232	1
4150	2
⋮	⋮
9130	3

A switch in a datagram network uses a routing table that is based on the destination address.

Virtual-Circuit Networks

A virtual-circuit network is a cross between a circuit-switched network and a datagram network. It has some characteristics of both.

1. As in a circuit-switched network, there are setup and teardown phases in addition to the data transfer phase.

2. Resources can be allocated during the setup phase, as in a circuit-switched network, or on demand, as in a datagram network.

As in a circuit-switched network, all packets follow the same path established during the connection.

A virtual-circuit network is normally implemented in the data-link layer, while a circuit-switched network is implemented in the physical layer and a datagram network in the network layer

Virtual-Circuit Identifier The identifier that is actually used for data transfer is called the virtual-circuit identifier (VCI) or the label

Virtual Circuits	Datagram Networks
1) Virtual circuits are connection-oriented, which means that there is a reservation of resources like buffers, bandwidth, etc. for the time during which the newly setup VC is going to be used by a data transfer session.	1) It is connectionless service. There is no need for reservation of resources as there is no dedicated path for a connection session.
2) A virtual circuit network uses a fixed path for a particular session, after which it breaks the connection and another path has to be set up for the next the next session.	2) A Datagram based network is a true packet switched network. There is no fixed path for transmitting data.
3) All the packets follow the same path and hence a global header is required only for the first packet of connection and other packets will not require it.	3) Every packet is free to choose any path, and hence all the packets must be associated with a header containing information about the source and the upper layer data.
4) Packets reach in order to the destination as data follows the same path.	4) Data packets reach the destination in random order, which means they need not reach in the order in which they were sent out.
5) Virtual Circuits are highly reliable.	5) Datagram networks are not as reliable as Virtual Circuits.

PERFORMANCE

Bandwidth

Bandwidth is the capacity of a wired or wireless network communications link to transmit the maximum amount of data from one point to another over a computer network or internet connection in a given amount of time -- usually one second. Synonymous with capacity, bandwidth describes the data transfer rate. Bandwidth is not a measure of network speed -- a common misconception.

While bandwidth is traditionally expressed in bits per second (bps), modern network links have greater capacity, which is typically measured in millions of bits per second (megabits per second, or Mbps) or billions of bits per second (gigabits per second, or Gbps).

Bandwidth connections can be symmetrical, which means the data capacity is the same in both directions to upload or download data, or asymmetrical, which means download and upload capacity are not equal. In asymmetrical connections, upload capacity is typically smaller than download capacity.

Throughput

Network throughput is usually represented as an average and measured in bits per second (bps), or in some cases as data packets per second. Throughput is an important indicator of the performance and quality of a network connection. A high ratio of unsuccessful message delivery will ultimately lead to lower throughput and degraded performance.

Network devices communicate by exchanging data packets. Throughput indicates the level of successful packet delivery from one point on the network to another. Dropping packets along the way lowers the throughtput and the quality of network connections. Throughput has very real consequences for web services.

Bandwidth and Throughput

Bandwidth and throughput can, at first glance, seem to be similar. There are, however a couple of important distinctions between the two.

Bandwidth refers to the size of an internet pipe. Internet communications usually happen in the shape of chunks of data called data packets. Bandwidth refers to the size of these data packets as well as the number that can travel through an internet pipe simultaneously.

An important distinction with throughput is that the fact that bandwidth refers to the theoretical size or capacity of the internet pipe. Throughput on the other hand refers to the actual number of data packets that get transmitted.Using the analogy of a highway, bandwidth would be the total number of cars that can travel along that highway over a period of time.

Latency

The latency or delay defines how long it takes for an entire message to completely arrive at the destination from the time the first bit is sent out from the source. We can say that latency is made of four components: propagation time, transmission time, queuing time and processing delay.

Latency = propagation time + transmission time +queuing time +processing delay

Propagation Time Propagation time measures the time required for a bit to travel from the source to the destination. The propagation time is calculated by dividing the distance by the propagation speed.

Propagation time = Distance / (Propagation Speed)

Transmission Time

The transmission time of a message

depends on the size of the message and the bandwidth of the channel.

Transmission time =(Message size) / Bandwidth

Queuing Time The third component in latency is the queuing time, the time needed for each intermediate or end device to hold the message before it can be processed. The queuing time is not a fixed factor; it changes with the load imposed on the network.

Jitter

Another performance issue that is related to delay is jitter. We can roughly say that jitter is a problem if different packets of data encounter different delays and the application using the data at the receiver site is time-sensitive (audio and video data, for example). If the delay for the first packet is 20 ms, for the second is 45 ms, and for the third is 40 ms, then the real-time application that uses the packets endures jitter.

UNIT I INTRODUCTION AND PHYSICAL LAYER

1.Define Computer Network.

A network is defined as a group of two or more computer systems linked together. There are many types of computer networks, including the following:

2.Give the different types of Networks

- local-area networks (LANs): The computers are geographically close together (that is, in the same building).
- wide-area networks (WANs): The computers are farther apart and are connected by telephone lines or radio waves.
- campus-area networks (CANs): The computers are within a limited geographic area, such as a campus or military base.
- metropolitan-area networks MANs): A data network designed for a town or city.
- home-area networks (HANs): A network contained within a user's home that connects a person's digital devices.

3.Draw three different topology in networks

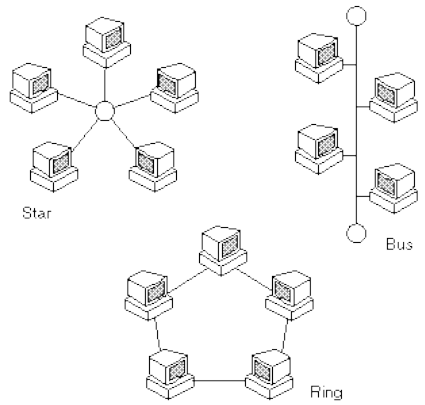

4.What is a Protocol ?

A protocol is a set of rules that govern how systems communicate. For networking they govern how data is transferred from one system to another.

5.Define TCP/IP Protocol Suite?

The TCP/IP protocol suite consists of many protocols that operate at one of 4 layers.
The protocol suite is named after two of the most common protocols – TCP (transmission Control Protocol) and IP (internet Protocol)

6.Define use of Circuit Switching

- Circuit switching is a switching technique that establishes a dedicated path between sender and receiver.
- In the Circuit Switching Technique, once the connection is established then the dedicated path will remain to exist until the connection is terminated.
- Circuit switching in a network operates in a similar way as the telephone works.
- A complete end-to-end path must exist before the communication takes place.

7.What does Packet Switching mean?

Packet switching is a digital network transmission process in which data is broken into suitably-sized pieces or blocks for fast and efficient transfer via different network devices. When a computer attempts to send a file to another computer, the file is broken into packets so that it can be sent across the network in the most efficient way. These packets are then routed by network devices to the destination.

8. List the Services of Physical Layer?

- Modulates the process of converting a signal from one form to another so that it can be physically transmitted over a communication channel
- Bit-by-bit delivery
- Line coding, which allows data to be sent by hardware devices that are optimized for digital communications that may have discreet timing on the transmission link
- Bit synchronization for synchronous serial communications
- Start-stop signaling and flow control in asynchronous serial communication
- Circuit switching and multiplexing hardware control of multiplexed digital signals

9. List the parameters that measure effectiveness and performance of communication networks?

I. Delivery. The system must deliver data to the correct destination. Data must be received by the intended device or user and only by that device or user. 7 Accuracy. The system must deliver the data accurately. Data that have been altered in transmission and left uncorrected are unusable. 3. Timeliness. The system must deliver data in a timely manner.

10.Draw the basic components in Data Communication

Figure 1.1 *Five components of data communication*

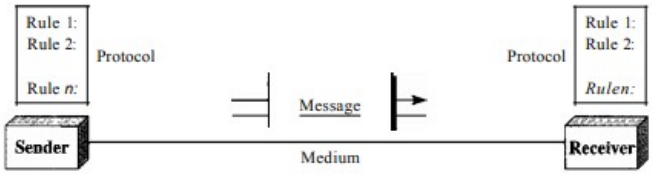

11. Give the types of data flow in networks

Figure 1.2 *Data flow (simplex, half-duplex, and full-duplex)*

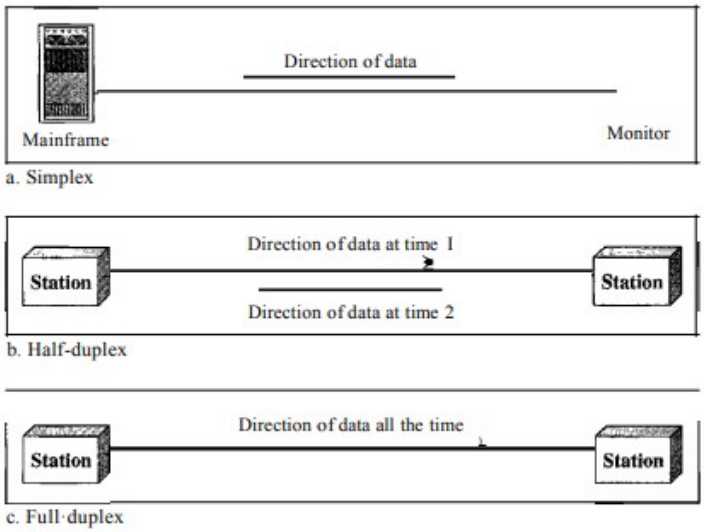

12.Differentiate Point to Point and Multipoint Networks

Point-to-Point A point-to-point connection provides a dedicated link between two devices. The entire capacity of the link is reserved for transmission between those two devices. Most point-to-point connections use an actual length of wire or cable to connect the two ends, but other options, such as microwave or satellite links, are also possible When you change television channels by infrared remote control, you are establishing a point-to-point connection between the remote control and the television's control system.Multipoint A multipoint (also called multidrop) connection is one in which more than two specific devices share a single link

13.Draw a Network with different types ?

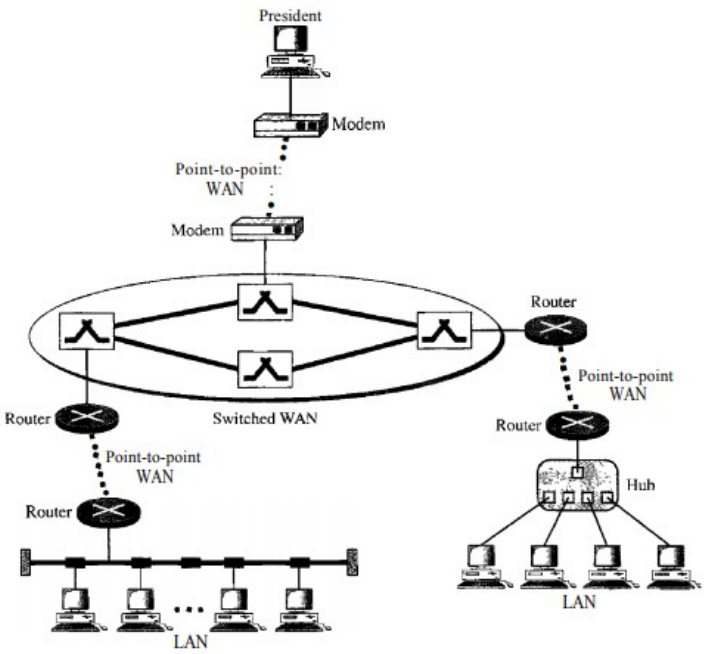

14.Define OSI Model?

The purpose of the OSI model is to show how to facilitate communication between different systems without requiring changes to the logic of the underlying hardware and software. The OSI model is not a protocol; it is a model for understanding and designing a network architecture that is flexible, robust, and interoperable

15.Give the responsibilities of the data link layer?

Framing.

Framing.

Physical addressing.

Flow control.

Error control.

Access control.

16.Give the responsibilities of the transport layer

Service-point addressing.

Segmentation and reassembly.

Connection control.

Flow control.

Error control.

17.Differentiate Flow Control and Error Control

o Flow control. Like the data link layer, the transport layer is responsible for flow control. However, flow control at this layer is performed end to end rather than across a single link.

o Error control. Like the data link layer, the transport layer is responsible for error control. However, error control at this layer is performed process-toprocess rather than across a single link. The sending transport layer makes sure that the entire message arrives at the receiving transport layer without error (damage, loss, or duplication). Error correction is usually achieved through retransmission.

18.Define Internetworking Protocol (IP)

The Internetworking Protocol (IP) is the transmission mechanism used by the TCP/IP protocols. It is an unreliable and connectionless protocol-a best-effort delivery service. The term best effort means that IP provides no error checking or tracking. IP assumes the unreliability of the underlying layers and does its best to get a transmission through to its destination, but with no guarantees

19.Define Address Resolution Protocol

The Address Resolution Protocol (ARP) is used to associate a logical address with a physical address. On a typical physical network, such as a LAN, each device on a link is identified by a physical or station address, usually imprinted on the network interface card (NIC). ARP is used to find the physical address of the node when its Internet address is known. ARP is discussed in Chapter 21.

20.Define Reverse Address Resolution Protocol

The Reverse Address Resolution Protocol (RARP) allows a host to discover its Internet address when it knows only its physical address. It is used when a computer is connected to a network for the first time or when a diskless computer is booted

21.Differentiate Physical and Logical Address

Physical Addresses

The physical address, also known as the link address, is the address of a node as defined by its LAN or WAN. It is included in the frame used by the data link layer. It is the

lowest-level address.

Logical Addresses

Logical addresses are necessary for universal communications that are independent of underlying physical networks. Physical addresses are not adequate in an internetwork environment where different networks can have different address formats. A universal addressing system is needed in which each host can be identified uniquely, regardless of the underlying physical network.

The logical addresses are designed for this purpose. A logical address in the Internet is currently a 32-bit address that can uniquely define a host connected to the Internet. No two publicly addressed and visible hosts on the Internet can have the same IP address.

22. Differentiate Analog and Digital Data

Analog and Digital Data

Data can be analog or digital. The term analog data refers to information that is continuous; digital data refers to information that has discrete states. For example, an analog clock that has hour, minute, and second hands gives information in a continuous form; the movements of the hands are continuous. On the other hand, a digital clock that reports the hours and the minutes will change suddenly from 8:05 to 8:06.

Analog data, such as the sounds made by a human voice, take on continuous values. When someone speaks, an analog wave is created in the air. This can be captured by a microphone and converted to an analog signal or sampled and converted to a digital signal.

Digital data take on discrete values. For example, data are stored in computer memory in the form of Os and 1s. They can be converted to a digital signal or modulated into an analog signal for transmission across a medium

23. Define Line Encoding

Line coding is the process of converting digital data to digital signals. We assume that data, in the form of text, numbers, graphical images, audio, or video, are stored in computer memory as sequences of bits (see Chapter 1). Line coding converts a sequence of bits to a digital signal. At the sender, digital data are encoded into a digital signal; at the receiver, the digital data are recreated by decoding the digital signal. Figure 4.1 shows

the process.

24. Give the types of transmission Media

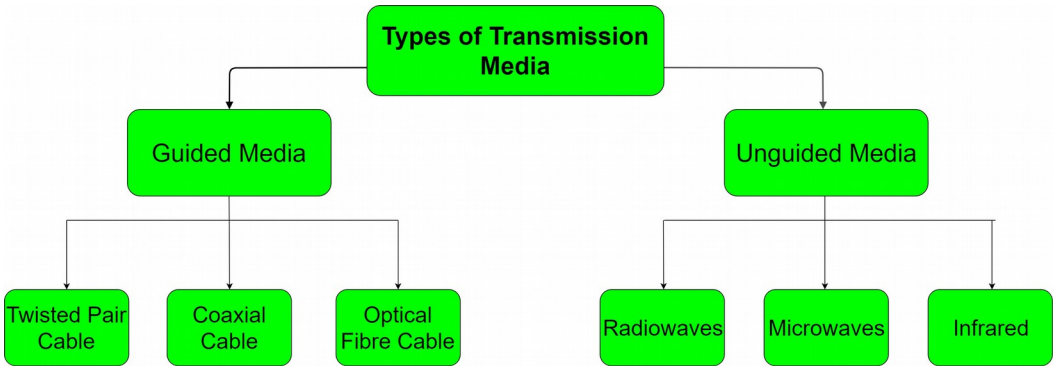

25. List the differernt switching techniques

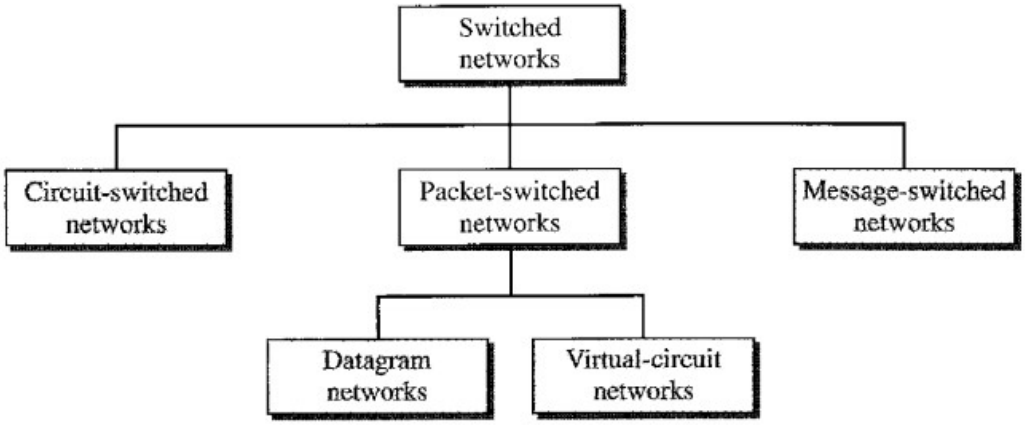

26. Differentiate Circuit switching and Packet switching APRIL MAY 2017

BASIS FOR COMPARISON	CIRCUIT SWITCHING	PACKET SWITCHING
Orientation	Connection oriented.	Connectionless.
Purpose	Initially designed for Voice communication.	Initially designed for Data Transmission.
Flexibility	Inflexible, because once a path is set all parts of a transmission follows the same path.	Flexible, because a route is created for each packet to travel to the destination.
Order	Message is received in the order, sent from the source.	Packets of a message are received out of order and assembled at the destination.

Unit II

DATA-LINK LAYER & MEDIA ACCESS

1.Define Data-Link layer?

The data link layer is the protocol layer in a program that handles the moving of data into and out of a physical link in a network. The data link layer is Layer 2 in the Open Systems Interconnection (OSI) architecture model for a set of telecommunication protocols. Data bits are encoded, decoded and organized in the data link layer, before they are transported as frames between two adjacent nodes on the same LAN or WAN. The data link layer also determines how devices recover from collisions that may occur when nodes attempt to send frames at the same time.

2.Give the Functions of the data link layer? NOV DEC 2016

It handles problems that occur as a result of bit transmission errors.

It ensures data flows at a pace that doesn't overwhelm sending and receiving devices.

It permits the transmission of data to Layer 3, the network layer, where it is addressed and routed.

3.What is the need of medium access control ?

The medium access control (MAC) sublayer is the layer that controls the hardware responsible for interaction with the wired, optical or wireless transmission medium. The MAC sublayer and the logical link control (LLC) sublayer together make up the data link layer

4.Define flow control ?

flow control is the process of managing the rate of data transmission between two nodes to prevent a fast sender from overwhelming a slow receiver. It provides a mechanism for the receiver to control the transmission speed, so that the receiving node is not overwhelmed with data from transmitting node. Flow control should be distinguished from congestion control, which is used for controlling the flow of data when congestion has actually occurred. Flow control mechanisms can be classified by whether or not the receiving node sends feedback to the sending node.

5.Define Logical link control?

The **logical link control** (**LLC**) data communication protocol layer is the upper sublayer of the data link layer (layer 2) of the seven-layer OSI model. The LLC sublayer provides multiplexing mechanisms that make it possible for several network protocols

6.Give some examples of Data link protocols?

Examples of data link protocols are Ethernet for local area networks (multi-node), the Point-to-Point Protocol (PPP), HDLC

7.Define Point-to-Point Protocol?

In computer networking, Point-to-Point Protocol (PPP) is a data link layer (layer 2) communications protocol used to establish a direct connection between two nodes. It connects two routers directly without any host or any other networking device in between. It can provide connection authentication, transmission encryption,[1] and compression.

8.Define High-Level Data Link Control?

High-Level Data Link Control (HDLC) is a bit-oriented code-transparent synchronous data link layer protocol developed by the International Organization for Standardization (ISO). The standard for HDLC is ISO/IEC 13239:2002.HDLC provides both connection-oriented and connectionless service.

9.What is the difference between wired LAN and wireless LAN?
In order to intercept data **in a wired LAN**, you need to physically connect to a switch or a router. ... **LAN** refers to a **wired network** while **WLAN** is used to refer to a **wireless network**. 2. **LAN** is commonly used in fixed **networks** while **WLAN** is common in areas where computers are moved quite often

10.Define Bluetooth?

Bluetooth is a short-range wireless communication technology that allows devices such as mobile phones, computers, and peripherals to transmit data or voice wirelessly over a short distance. The purpose of Bluetooth is to replace the cables that normally connect devices, while still keeping the communications between them secure.

11.Define a piconet?

A piconet is the type of connection that is formed between two or more Bluetooth-enabled devices such as modern cell phones or PDAs. Bluetooth enabled devices are "peer units" in that they are able to act as either master or slave. However, when a piconet is formed between two or more devices, one device takes the role of the 'master', and all other devices assume a 'slave' role for synchronization reasons. Piconets have a 7 member address space (3 bits, with zero reserved for broadcast), which limits the maximum size of a piconet to 8 devices, i.e. 1 master and 7 slaves

12.Define a scatternet ? NOV DEC 2016

A *scatternet* is a number of interconnected piconets that supports communication between more than 8 devices. Scatternets can be formed when a member of one piconet (either the master or one of the slaves) elects to participate as a slave in a second, separate piconet. The device participating in both piconets can relay data between members of both ad hoc networks.

13.What is the need of Repeater

A repeater operates at the physical layer. Its job is to regenerate the signal over the same network before the signal becomes too weak or corrupted so as to extend the length to which the signal can be transmitted over the same network. An important point to be noted about repeaters is that they do not amplify the signal. When the signal becomes weak, they copy the signal bit by bit and regenerate it at the original strength. It is a 2 port device.

14,What is the need of Hub

A hub is basically a multiport repeater. A hub connects multiple wires coming from different branches, for example, the connector in star topology which connects different stations. Hubs cannot filter data, so data packets are sent to all connected devices. In other words, collision domain of all hosts connected through Hub remains one. Also, they do not have intelligence to find out best path for data packets which leads to inefficiencies and wastage.

15.What is the need of Bridge APRIL MAY 2017

A bridge operates at data link layer. A bridge is a repeater, with add on functionality of filtering content by reading the MAC addresses of source and destination. It is also used for interconnecting two LANs working on the same protocol. It has a single input and single output port, thus making it a 2 port device

16.What is the need of Switch

A switch is a multi port bridge with a buffer and a design that can boost its efficiency(large number of ports imply less traffic) and performance. Switch is data link layer device. Switch can perform error checking before forwarding data, that makes it very efficient as it does not forward packets that have errors and forward good packets selectively to correct port only. In other words, switch divides collision domain of hosts, but broadcast domain remains same.

17. What is the need of Routers ?

A router is a device like a switch that routes data packets based on their IP addresses. Router is mainly a Network Layer device. Routers normally connect LANs and WANs together and have a dynamically updating routing table based on which they make decisions on routing the data packets. Router divide broadcast domains of hosts connected through it.

18.What is the need of Gateway ?

A gateway, as the name suggests, is a passage to connect two networks together that may work upon different networking models. They basically works as the messenger agents that take data from one system, interpret it, and transfer it to another system. Gateways are also called protocol converters and can operate at any network layer. Gateways are generally more complex than switch or router.

19.Differentiate Flow Control and Error Control

1. Flow Control

Flow control refers to a set of procedures used to restrict the amount of data that the sender can send before waiting for acknowledgment.

2. Error Control

Error control is both error detection and error correction. It allows the receiver to inform the sender of any frames lost or damaged in transmission and coordinates the retransmission of those frames by the sender.

20.What are the responsibilities of data link layer?

Specific responsibilities of data link layer include the following.

a) Framing

b) Physical addressing

c) Flow control

d) Error control

e) Access control

21.Mention the categories of flow control.

There are 2 methods have been developed to control flow of data across communication links.

- Stop and wait- send one from at a time.
- Sliding window- send several frames at a tim

22.What is meant by bit stuffing? APRIL MAY 2017

Bit stuffing is the process of adding one extra 0 whenever there are 5 consecutive in the data so that the receiver doesn't mistake the data for a flag.

23.**Mention the different kinds of Ethernet networks.**

a) Switched Ethernet

b) Fast Ethernet

c) Gigabit Ethernet

24.What is piggy backing?

Piggy backing means combining data to sent and acknowledgement of the frame received in one single frame. Piggy backing can save bandwidth because the overhead from a data frame and an ACK frame can be combined in to just one frame

25.Differentiate Byte and Bit oriented Protocol.NOV DEC 2017

A bit-oriented protocol is a communications protocol that sees the transmitted data as an opaque stream of bits with no semantics, or meaning. Control codes are defined in terms of bit sequences instead of characters. Bit oriented protocol can transfer data frames regardless of frame contents. It can also be stated as "bit stuffing" this technique allows the data frames to contain an arbitrary number of bits and allows character codes with arbitrary number of bits per character.

26.Draw Ethernet Frame format Nov Dec 2017

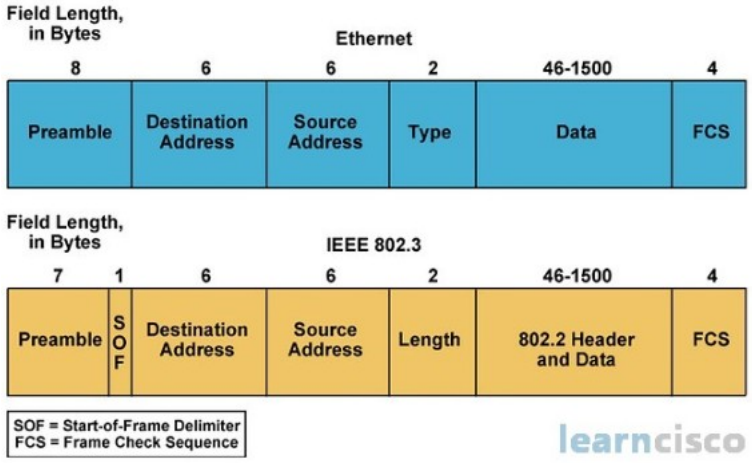

Unit III

NETWORK LAYER

1.Define ICMP?

ICMP uses the source IP address to send the error message to the source of the datagram. ICMP always reports error messages to the original source.

2.Why we migrate from IPv4 to IPv6? APRIL MAY 2016

- Despite all short-term solutions, such as subnetting, classless addressing, and NAT, address depletion is still a long-term problem in the Internet.

- The Internet must accommodate real-time audio and video transmission. This type of transmission requires minimum delay strategies and reservation of resources not provided in the IPv4 design.

- The Internet must accommodate encryption and authentication of data for some applications. No encryption or authentication is provided by IPv4.

To overcome these deficiencies, IPv6 (Internetworking Protocol, version 6), also known as IPng (Internetworking Protocol, next generation), was proposed and is now a standard.

3.What are the responsibilities of network layer?

The network layer is responsible for the source-to-destination delivery of packet across multiple network links. The specific responsibilities of network layer include the following:

Logical addressing.

Routing.

4.What are data grams?

In datagram approach, each packet is treated independently from all others. Even when one packet represents just a place of a multipacket transmission, the network treats it although it existed alone. Packets in this technology are referred to as datagram.

5.**What are the four internetworking devices?**

The four internetworking devices are,

- Repeaters
- Bridges
- Routers
- Gateway

6.**Define IP address.**

IP address is the 3-bit number for representing a host or system in the network. One portion of the IP address indicates a networking and the other represents the host in a network.

7. Define IP?

The network-layer protocol in the TCP/IP protocol suite governingconnectionless transmission across packet switching networks.

8.List the major protocols for unicast routing?

There are three major protocols for unicast routing:

1. Distance Vector Routing
2. Link State Routing
3. Path-Vector Routing

9.Differentaite Intra- and Inter-domain Routing?

An internet can be so large that one routing protocol cannot handle the task of updating the routing tables of all routers. For this reason, an internet is divided into autonomous systems. An autonomous system (AS) is a group of networks and routers under the authority of a single administration. Routing inside an autonomous system is referred to as intradomain routing. Routing between autonomous systems is referred to as interdomain routing

10.Define Distance Vector Routing?

In distance vector routing, the least-cost route between any two nodes is the route with minimum distance. In this protocol, as the name implies, each node maintains a vector (table) of minimum distances to every node. The table at each node also guides the packets to the desired node by showing the next stop in the route (next-hop routing).

11.Define Link State Routing?

Link state routing has a different philosophy from that of distance vector routing. In link state routing, if each node in the domain has the entire topology of the domain the list of nodes and links, how they are connected including the type, cost (metric), and condition of the links (up or down)-the node can use Dijkstra's algorithm to build a routing table.

12.Define Path Vector Routing?

Distance vector and link state routing are both intradomain routing protocols. They can be used inside an autonomous system, but not between autonomous systems. These two protocols are not suitable for interdomain routing mostly because of scalability. Both of these routing protocols become intractable when the domain of operation becomes large. Distance vector routing is subject to instability if there are more than a few hops in the domain of operation. Link state routing needs a huge amount of resources to calculate routing tables. It also creates heavy traffic because of flooding. There is a need for a third routing protocol which we call path vector routing.

13.Define purpose of Unicasting?

In unicast communication, there is one source and one destination. The relationship between the source and the destination is one-to-one. In this type of communication, both the source and destination addresses, in the IP datagram, are the unicast addresses assigned to the hosts (or host interfaces, to be more exact).

14.Define purpose of Multicasting?

In multicast communication, there is one source and a group of destinations. The relationship is one-to-many. In this type of communication, the source address is a unicast address, but the destination address is a group address, which defines one or more destinations. The group address identifies the members of the group.

A multicast packet starts from the source S1 and goes to all destinations that belong to group G1. In multicasting, when a router receives a packet, it may forward it through several of its interfaces.

15.Define Broadcasting?

In broadcast communication, the relationship between the source and the destination is one-to-all. There is only one source, but all the other hosts are the destinations. The Internet does not explicitly support broadcasting because of the huge amount of traffic it would create and because of the bandwidth it would need. Imagine the traffic generated in the Internet if one person wanted to send a message to everyone else connected to the Internet.

16.Give the applications of Multicasting?

Multicasting has many applications today such as access to distributed databases, information dissemination, teleconferencing, and distance learning.

17.Define Multicast Routing?

When a router receives a multicast packet, the situation is different fromwhen it receives a unicast packet. A multicast packet may have destinations in more than one network. Forwarding of a single packet to members of a group requires a shortest path tree. If we have n groups, we may need n shortest path trees. We can imagine the complexity of multicast routing. Two approaches have been used to solve the problem: source-based trees and group-shared trees.

18.Define IPv4?

The Internet Protocol version 4 (IPv4) is the delivery mechanism used by the TCP/IP protocols.

IPv4 is an unreliable and connectionless datagram protocol-a best-effort delivery service. The term best-effort means that IPv4 provides no error control or flow control (except for error detection on the header). IPv4 assumes the unreliability of the underlying layers and does its best to get a transmission through to its destination, but with no guarantees.

19. How the routers get the information about neighbor?

A router gets its information about its neighbors by periodically sending them a short greeting packet. If the neighborhood responds to the greeting as expected, it is assumed to be alive and functioning. If it does not, a change is assumed to have occurred and the sending router then alerts the rest of the network in its next LSP.

20.Define ICMP ?

ICMP (Internet Control Message Protocol) is an error-reporting protocol network devices like routers use to generate error messages to the source IP address when network problems prevent delivery of IP packets. ICMP creates and sends messages to the source IP address indicating that a gateway to the Internet that a router, service or host cannot be reached for packet delivery. Any IP network device has the capability to send, receive or process ICMP messages.

21.What is the purpose of ICMP redirect messages ? APRIL MAY 2017

An ICMP redirect is an error message sent by a router to the sender of an IP packet . Redirects are used when a router believes a packet is being routed sub optimally and it would like to inform the sending host that it should forward subsequent packets to that same destination through a different gateway

22. What is the difference between a routing table and a forwarding table? NOV DEC 2017

A routing table uses a packet's destination IP address to determine which IP address should next receive the packet, that is, the "next hop" IP address.

A forwarding table uses the "next hop" IP address to determine which interface should deliver the packet to that next hop, and which layer 2 address (e.g., MAC address) should receive the packet on multipoint interfaces like Ethernet or Wi-Fi.

Unit IV

TRANSPORT LAYER

1. What is function of transport layer?

The protocol in the transport layer takes care in the delivery of data from one application program on one device to an application program on another device. They act as a link between the upper layer protocols and the services provided by the lower layer.

2. What are the duties of the transport layer?

The services provided by the transport layer End-to-end delivery, Addressing, Reliable delivery, Flow control & Multiplexing

3. What is the difference between network layer delivery and the transport layer delivery?

Network layer delivery

The network layer is responsible for the source-to-destination delivery of packet across multiple network links.

Transport layer delivery

The transport layer is responsible for source-to-destination delivery of the entire message.

4. What are the four aspects related to the reliable delivery of data?

The four aspects are,

Error control, Sequence control, Loss control & Duplication control

5. What is meant by segment?

At the sending and receiving end of the transmission, TCP divides long transmissions into smaller data units and packages each into a frame called a segment.

6. What is meant by segmentation?

When the size of the data unit received from the upper layer is too long for the network layer datagram or data link layer frame to handle, the transport protocol divides it into smaller usable blocks. The dividing process is called segmentation.

7. What is meant by Concatenation?

The sizes of the data unit belonging to a single session are so small that several can fit together into a single datagram or frame, the transport protocol combines them into a single data unit. The combining process is called concatenation.

8. Explain the main idea of UDP.

UDP is called a connectionless, unreliable transport protocol. It does not add anything to the services of IP except to provide process-to-process communication instead of host-to-host communication. Also, it performs very limited error checking.

9. What are the two possible transport services?

Two basic types of transport services are,

Connection service

Connectionless services

10. The transport layer creates the connection between source and destination. What are the three events involved in the connection?

For security, the transport layer may create a connection between the two end ports. A connection is a single logical path between the source and destination that is associated with all packets in a message. Creating a connection involves three steps:

Connection establishment

Data transfer & Connection release.

11. Name the parameters of quality of services in a network.

Reliability, Delay, Jitter & Bandwidth.

12. What is meant by congestion? Why the congestion occur in network?

Congestion in a network occurs if user sends data into the network at a rate greater than that allowed by network resources. Congestion occurs because the switches in a network have a limited buffer size to store arrived packets

13. What is TCP?

TCP guarantees the reliable, in order delivery of a stream of bytes. It is a full-duplex protocol, meaning that each TCP connection supports a pair of byte streams, one flowing in each direction.

14. Give the difference between service point address, logical address & physical address?
Service point addressing

The transport layer header includes a type of address called a service point address or port address, which makes a data delivery from a specific process on one computer to a specific process on another computer.

Logical addressing

If a packet passes the network boundary we need another addressing to differentiate the source and destination systems. The network layer adds headers, which indicate the logical address of the sender and receiver.

Physical addressing

If the frames are to be distributed to different systems on the network, the data link layer adds the header, which defines the source machine's address and the destination machine's address.

14.Differentiate TCP and UDP

TCP	UDP
Reliable	Unreliable
Connection-oriented	Connectionless
Segment retransmission and flow control through windowing	No windowing or retransmission
Segment sequencing	No sequencing
Acknowledge sequencing	No acknowledgment

15.Define SCTP?

In TCP/IP and UDP networks, a port is an endpoint to a logical connection and the way a client program specifies a specific server program on a computer in a network. The port number identifies what type of port it is

The Stream Control Transmission Protocol (SCTP) is a computer networking communications protocol which operates at the transport layer and serves a role similar to the popular protocols TCP and UDP. It is standardized by IETF in RFC 4960.SCTP provides some of the features of both UDP and TCP: it is message-oriented like UDP and ensures reliable, in-sequence transport of messages with congestion control like TCP. It differs from those protocols by providing multi-homing and redundant paths to increase resilience and reliability.

16. Define Fast retransmit and recovery (FRR) APRIL MAY 2017

In TCP/IP, fast retransmit and recovery (FRR) is a congestion control algorithm that makes it possible to quickly recover lost data packets. Without FRR, the TCP uses a timer that requires a retransmission timeout if a packet is lost. No new or duplicate packets can be sent during the timeout period. With FRR, if a receiver receives a data segment that is out of order, it immediately sends a duplicate acknowledgement to the sender. If the sender receives three duplicate acknowledgements,

Unit IV

APPLICATION LAYER

1. What is the purpose of Domain Name System?

Domain Name System can map a name to an address and conversely an address to name.

2. Discuss the three main division of the domain name space.

Domain name space is divided into three different sections: generic domains, country domains & inverse domain.

Generic domain: Define registered hosts according to their generic behavior, uses genericsuffixes.

Country domain: Uses two characters to identify a country as the last suffix. Inverse domain: Finds the domain name given the IP address.

3. Discuss the TCP connections needed in FTP.

FTP establishes two connections between the hosts. One connection is used for data transfer, the other for control information. The control connection uses very simple rules of communication. The data connection needs more complex rules due to the variety of data types transferred.

4. Discuss the basic model of FTP.

The client has three components: the user interface, the client control process, and the client data transfer process. The server has two components: the server control process and the server data transfer process. The control connection is made between the control processes. The data connection is made between the data transfer processes.

5. What is the function of SMTP?

The TCP/IP protocol supports electronic mail on the Internet is called Simple Mail Transfer (SMTP). It is a system for sending messages to other computer users based on e-mail addresses. SMTP provides mail exchange between users on the same or different computers.

6. What is the difference between a user agent (UA) and a mail transfer agent? (MTA)?

The UA prepares the message, creates the envelope, and puts the message in the envelope. The MTA transfers the mail across the Internet.

7. Why is an application such as POP needed for electronic messaging?

Workstations interact with the SMTP host which receives the mail on behalf of every host in the organization, to retrieve messages b y using a client-server protocol such as Post Office Protocol , version 3(POP3). Although POP3 is used to download messages from the server, the SMTP client still needed on the desktop to forward messages from the workstation user to its SMTP mail server.

8.Define SNMP

Simple Network Management Protocol (SNMP) is an application-layer protocol used to manage and monitor network devices and their functions. SNMP provides a common language for network devices to relay management information within single- and multivendor environments in a local area network (LAN) or wide area network (WAN). The most recent iteration of SNMP, version 3, includes security enhancements that authenticate and encrypt SNMP messages as well as protect packets during transit.

9.Define SSH

SSH, also known as Secure Shell or Secure Socket Shell, is a network protocol that gives users, particularly system administrators, a secure way to access a computer over an unsecured network. SSH also refers to the suite of utilities that implement the SSH protocol. Secure Shell provides strong authentication and encrypted data communications between two computers connecting over an open network such as the internet. SSH is widely used by network administrators for managing systems and applications remotely, allowing them to log into another computer over a network, execute commands and move files from one computer to another.

10. Define Telnet

Telnet is a protocol used on the Internet or local area network to provide a bidirectional interactive text-oriented communication facility using a virtual terminal connection. User data is interspersed in-band with Telnet control information in an 8-bit byte oriented data connection over the Transmission Control Protocol (TCP).

11.Define POP3 NOV DEC 2016

Post Office Protocol, version 3 (POP3) is simple and limited in functionality. The client POP3 software is installed on the recipient computer; the server POP3 software is installed on the mail server. Mail access starts with the client when the user needs to download e-mail from the mailbox on the mail server. POP3 has two modes: the delete mode and the keep mode. In the delete mode, the mail is deleted from the mailbox after each retrieval. In the keep mode, the mail remains in the mailbox after retrieval. The delete mode is normally used when the user is working at her permanent computer and can save and organize the received mail after reading or replying. The keep mode is normally used when the user accesses her mail away from her

primary computer (e.g., a laptop). The mail is read but kept in the system for later retrieval and organizing.

12. Define IMAP4 NOV DEC 2016

Another mail access protocol is Internet Mail Access Protocol, version 4 (IMAP4). IMAP4 is similar to POP3, but it has more features; IMAP4 is more powerful and more complex

13. What is the purpose of HTTP Nov Dec 2017

The Hypertext Transfer Protocol (HTTP) is a protocol used mainly to access data on the World Wide Web. HTTP functions as a combination of FTP and SMTP. It is similar to FTP because it transfers files and uses the services of TCP. However, it is much simpler than FTP because it uses only one TCP connection. There is no separate control connection; only data are transferred between the client and the server. HTTP is like SMTP because the data transferred between the client and the server look like SMTP messages.

14.Define Domain name space

The domain name space consists of a tree data structure. Each node or leaf in the tree has a label and zero or more resource records (RR), which hold information associated with the domain name. The domain name itself consists of the label, possibly concatenated with the name of its parent node on the right, separated by a dot.

15.Define Name servers

The Domain Name System is maintained by a distributed database system, which uses the client–server model. The nodes of this database are the name servers. Each domain has at least one authoritative DNS server that publishes information about that domain and the name servers of any domains subordinate to it.

16.What is the purpose of Application layer

An application layer is an abstraction layer that specifies the shared communications protocols and interface methods used by hosts in a communications network. The application layer abstraction is used in both of the standard models of computer networking: the Internet Protocol Suite (TCP/IP) and the OSI model. Although both models use the same term for their respective highest level layer, the detailed definitions and purposes are different.

17. Define DNS Resource Records APRIL MAY 2017

A resource record, commonly referred to as an RR, is the unit of information entry in DNS zone files; RRs are the basic building blocks of host-name and IP information and are used to resolve all DNS queries. Resource records come in a fairly wide variety of types in order to provide extended name-resolution services.

Different types of RRs have different formats, as they contain different data. Many RRs share a common format. Each DNS Server contains RRs for the portion of the name space for which it is authoritative.

18.Define HTTP persistent connection NOV DEC 2016

HTTP persistent connection, also called HTTP keep-alive, or HTTP connection reuse, is the idea of using a single TCP connection to send and receive multiple HTTP requests/responses, as opposed to opening a new connection for every single request/response pair

PART B

Unit I

Explain the layers in TCP/IP Protocol suite?

Explain the layers OSI Model? NOV DEC 2017, NOV DEC 2016

Explain various Transmission media in networks ?

Explain various Switching techniques ?

Explain in deep the Circuit-switched Networks and Packet Switching. ?

UNIT II

Explain various DLC Services ?

Explain the Data-Link Layer Protocols ?

Explain about HDLC?

Explain PPP protocol-

Explain Media Access Control techniques?

Explain with diagrams physical properties of Wired LANs? NOV DEC 2016

Explain with diagrams Wireless LANs ?

Explain with diagrams IEEE 802.11? NOV DEC 2017

Explain in detail about Bluetooth ? NOV DEC 2017

Explain various connecting Devices. ?

UNIT III

Explain various Network Layer Services ?

Explain in detail about Packet switching ?

Explain about IPV4 Addresses ?

Explain in detail Forwarding of IP Packets ?

Explain various Network Layer Protocols: IP, ICMP v4?

Explain in detail Unicast Routing Algorithms?

Explain about Multicasting routing Basics ? NOV DEC 2016

Explain IPV6 Addressing and IPV6 Protocol. ?

UNIT IV

Explain Transport Layer Protocols ?

Explain about Services in the Transport Layer?

Explain transport Layer port numbers ?

Explain about User Datagram Protocol with neat diagram?

Explain about TCP with neat diagram? NOV DEC 2017

Explain about SCTP with neat diagram?

UNIT V

Explain in detail about WWW ?

Explain in detail HTTP request operations ? NOV DEC 2017

Explain in detail FTP?

Explain various Email Services ?

Explain various Telnet Services ?

Explain in detail about SSH ?

Explain in DNS protocol ? NOV DEC 2017 ,NOV DEC 2016

Explain in detail about SNMP protocol . ? NOV DEC 2016

Question Paper Code : 71686

B.E./B.Tech. DEGREE EXAMINATION, APRIL/MAY 2017.

Fourth/Fifth/Sixth/Seventh/Eighth Semester

Computer Science and Engineering

CS 6551 — COMPUTER NETWORKS

(Common to Biomedical Engineering, Electronics and Communication Engineering, Mechatronics Engineering, and Information Technology)

(Regulation 2013)

Time : Three hours

Maximum : 100 marks

Answer ALL questions.

PART A — (10 × 2 = 20 marks)

1. Distinguish between packet switched and circuit switched networks.
2. What is meant by bit stuffing? Give an example.
3. State the functions of bridges.
4. When is ICMP redirect message used?
5. How do routers differentiate the incoming unicast, multicast and broadcast IP packets.
6. Why is IPV4 to IPV6 transition required?
7. List the advantages of connection oriented services over connectionless services.
8. How do fast retransmit mechanism of TCP works?
9. State the usage of conditional get in HTTP.
10. Present the information contained in a DNS resource record.

PART B — (5 × 13 = 65 marks)

11. (a) (i) Explain the challenges faced in building a network. (10)

(ii) Obtain the 4-bit CRC code for the data bit sequence 10011011100 using the polynomial $x^4 + x^2 + 1$. (3)

Or

(b) (i) With a protocol graph, explain the architecture of internet. (7)

(ii) Consider a bus LAN with a number of equally spaced stations with a data rate of 9 Mbps and a bus length of 1 km. What is the mean time to send a frame of 500 bits to another station, measured from the beginning of transmission to the end of reception? Assume a propagation speed of 150 m/s. If two stations begin to monitor and transmit at the same time, how long does it need to wait before an interference is noticed? (6)

12. (a) (i) Discuss the working of CSMA/CD protocol. (6)

(ii) Explain the functions of MAC layer present in IEEE 802.11 with necessary diagrams. (7)

Or

(b) (i) Consider sending a 3500-byte datagram that has arrived at a router R_1 that needs to be sent over a link that has an MTU size of 1000 bytes to R_2. Then it has to traverse a link with an MTU of 600 bytes. Let the identification number of the original datagram be 465. How many fragments are delivered at the destination ? Show the parameters associated with each of these fragments. (6)

(ii) Explain the working of DHCP protocol with its header format. (7)

13. (a) Explain in detail the operation of OSPF protocol by considering a suitable network. (13)

Or

(b) Explain the working of Protocol Independent Multi-cast (PIM) in detail. (13)

14. (a) (i) Explain the adaptive flow control and retransmission techniques used in TCP. (8)

(ii) With TCPs slow start and AIMD for congestion control, show how the window size will vary for a transmission where every 5th packet is lost. Assume an advertised window size of 50 MSS. (5)

Or

(b) (i) Explain congestion avoidance using random early detection in transport layer with an example. (7)

(ii) Explain the differentiate services operation of QOS in detail. (6)

15. (a) (i) Describe how SMTP transfers message from one host to another with suitable illustration. (6)

(ii) Explain IMAP with its state transition diagram. (7)

Or

(b) (i) List the elements of network management and explain the operation of SNMP protocol in detail. (8)

(ii) Discuss the functions performed by of DNS. Give example. (5)

PART C — (1 × 15 = 15 marks)

16. (a) (i) Draw the format of TCP packet leader and explain each of its field. (10)

(ii) Specify the justification for having variable field lengths for the fields in the TCP header. (5)

Or

(b) Illustrate the sequence of events and the respective protocols involved while accessing a web page from a machine when it is connected with internet for first time. (15)

Reg. No. A U H I P P O . C O M *

Question Paper Code : 80300

B.E./B.Tech. DEGREE EXAMINATION, NOVEMBER/DECEMBER 2016.

Seventh Semester

Bio Medical Engineering

CS 6551 — COMPUTER NETWORKS

(Common to Fourth Semester – Computer Science and Engineering/ Fifth Semester – Information Technology and Sixth Semester Electronics and Communication Engineering)

(Regulations 2013)

Time : Three hours | Maximum : 100 marks

Answer ALL questions.

PART A — (10 × 2 = 20 marks)

1. List the services provided by data link layer.
2. Write the mechanism of stop and wait flow control.
3. What is meant by exponential backoff?
4. What is scatternet?
5. Define VCI.
6. What is fragmentation and reassembly?
7. Give the comparison of unicast, multicast and broadcast routing.
8. Differentiate between TCP and UDP.
9. Expand POP3 and IMAP4.
10. What is persistent HTTP?

PART B — (5 × 16 = 80 marks)

11. (a) Draw the OSI network architecture and explain the functionalities of each layer in detail. (16)

Or

(b) (i) Discuss in detail about the network performance measures. (8)

(ii) Explain selective-repeat ARQ flow control method. (8)

12. (a) Explain the physical properties of Ethernet 802.3 with necessary diagram of Ethernet transceiver and adapter. (16)

Or

(b) With a neat sketch explain about IP service model, packet format, Fragmentation and reassembly. (16)

13. (a) Discuss in detail about open source shortest path routing with neat diagrams. (16)

Or

(b) Discuss in detail about any two Multicast routing with neat sketches. (16)

14. (a) Explain various fields of the TCP header and the working of the TCP protocol. (16)

Or

(b) How is congestion controlled? Explain in detail about congestion control techniques in transport layer. (16)

15. (a) Give a detailed note on DNS operation. (16)

Or

(b) (i) Explain in detail about SNMP messages. (8)

(ii) Illustrate the role of POP3 in Electronic mail Applications. (8)

Reg. No. A U H I P P O . C O M *

Question Paper Code : 50395

B.E./B.Tech. DEGREE EXAMINATION, NOVEMBER/DECEMBER 2017

Fourth/Fifth/Sixth/Seventh/Eighth Semester

Computer Science and Engineering

CS6551 : COMPUTER NETWORKS

(Common to Biomedical Engineering, Electronics and Communication Engineering, Mechatronics Engineering, Information Technology)

(Regulations 2013)

Time : Three Hours Maximum : 100 Marks

Answer ALL questions

PART – A (10×2=20 Marks)

1. Define the terms : Bandwidth and Latency.
2. Compare Byte-oriented versus Bit-oriented protocol.
3. Show the Ethernet frame format.
4. Highlight the characteristics of datagram networks.
5. Differentiate between forwarding table and routing table.
6. What is Border Gateway Protocol (BGP) ?
7. Compare flow control versus congestion control.
8. What are the approaches used to provide a range of Quality of Service (QoS) ?
9. Write the use of Hyper Text Transfer Protocol (HTTP).
10. What do you mean by Web Services Description Language (WSDL) ?

PART – B (5×13=65 Marks)

11. a) With a neat sketch, explain the architecture of an OSI seven layer model. (13)

(OR)

b) Discuss the approaches used for error detection in networking. (13)

12. a) Explain the functions of Wi-Fi and Bluetooth in detail. (1

(OR)

b) i) Explain the datagram forwarding in IP. (

ii) Show and explain the ARP packet format for mapping IP addresses into Ethernet addresses. (

13. a) With an example, explain the function of link state routing protocol. (1

(OR)

b) Elaborate on multicast routing protocols. (13

14. a) i) Draw a TCP state transition diagram for connection management. (7

ii) Brief about approaches used for TCP congestion control. (6

(OR)

b) Write a detailed note on congestion avoidance mechanisms used in TCP. (13

15. a) i) Explain the function of Internet Message Access Protocol (IMAP) with a state diagram. (8

ii) List and explain the various HTTP request operations. (5

(OR)

b) i) What is Domain Name System (DNS) ? Explain. (8

ii) Brief about the importance of Simple Network Management Protocol (SNMP). (5

PART – C

(1×15=15 Marks)

16. a) Outline the steps involved in building a computer network. Give the detailed description for each step. (15

(OR)

b) For the network given in Figure 1, give global distance – vector tables when

i) Each node knows only the distances to its immediate neighbors. (5

ii) Each node has reported the information it had in the preceding step to its immediate neighbors. (5

iii) Step (ii) happens a second time. (5

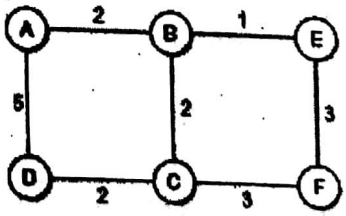

Figure 1

Reg. No. AUHIPPO.COM

Question Paper Code : 20371

B.E./B.Tech. DEGREE EXAMINATION, NOVEMBER/DECEMBER 2018.

Fourth/Fifth/Sixth/Seventh/Eighth Semester

Computer Science and Engineering

CS 6551 – COMPUTER NETWORKS

(Common to Electronics and Communication Engineering, Mechatronics Engineering, Information Technology, Biomedical Engineering)

(Regulations 2013)

(Also Common to PTCS 6551 – Computer Networks for B.E. (Part-Time) Third Semester – Computer Science and Engineering – Regulations 2014)

Time : Three hours Maximum : 100 marks

Answer ALL questions.

PART A — (10 × 2 = 20 marks)

1. Which layer implements the node to node channel connection in OSI layered architecture?

2. Suppose the following sequence of bits arrives over a link:

   1101011111010111110010111110110. Show the resulting frame after any stuffed bits have been removed. Indicate any errors that might have been introduced into the frame.

3. Suppose you are designing a sliding window protocol for a 1.5 Mbps point-to-point link, which has one way latency of 1.5 seconds. Assuming each frame carries 10 KB of data, what is the minimum number of bits required for the sequence number if SWS = RWS?

4. What details are provided by DHCP other than IP address?

5. List the two factors that affect the performance of a network switch.

6. Check whether the following IPv6 address notations are correct?

   (a) ::0F53:6382:AB00:67DB:BB27:7332

   (b) 7803:42F2:::88EC:D4BA:B75D:11CD

7. Suppose TCP operates over 10-Gbps link. Assuming TCP could utilize the full bandwidth continuously, how long would it take the sequence numbers to wrap around completely? Is the sequence number space adequate?

8. Define QoS.

9. Consider an HTTP client that wants to retrieve a Web document at a given URL. The IP address of the HTTP server is initially unknown. What transport and application-layer protocols are needed in this scenario?

10. What is the use of SNMP protocol in a network?

PART B — (5 × 13 = 65 marks)

11. (a) (i) List the requirements in building a computer network. (5)

(ii) Suppose a 128-kbps point-to-point link is set up between the Earth and a rover on Mars. The distance from the Earth to Mars (when they are closest together) is approximately 55 Giga meters, and data travels over the link at the speed of light at 3×10^8 m/s.

(1) Calculate the minimum RTT for the link.

(2) Calculate the delay-bandwidth product for the link.

(3) A camera on the rover takes pictures of its surroundings and sends these to Earth. How quickly after a picture is taken can it reach Mission Control on Earth? Assume that each image is 5 Mb in size. (8)

Or

(b) (i) Suppose we want to transmit the message 1011 0010 0111 and protect it from errors using the CRC polynomial $x^4 + x^2 + 1$. Use polynomial long division to determine the message that should be transmitted. Suppose the leftmost bit of the message is inverted due to noise on the transmission link. What is the result of the receiver's CRC calculation? How does the receiver know that an error has occurred? (5)

(ii) Explain the algorithm used for reliable transmission and flow control. (8)

12. (a) (i) Explain the media access control algorithm, CSMA/CD used in Ethernet. Why the same algorithm cannot be used in wireless LAN? (8)

(ii) Consider sending a 2400-byte datagram into a link that has an MTU of 700 bytes. Suppose the original datagram is stamped with the identification number 422. How many fragments are generated? What are the values in the various fields in the IP datagram(s) generated related to fragmentation. (5)

Or

(b) (i) Explain the error reporting using ICMP protocol. How does Traceroute program makes use of ICMP to determine the name and addresses of the routers between source and destination? (7)

(ii) Suppose all of the interfaces in each of three subnets are required to have the prefix 223.1.17/24. Also suppose that Subnet 1 is required to support at least 60 interfaces, Subnet 2 is to support at least 90 interfaces, and Subnet 3 is to support at least 12 interfaces. Provide three network addresses that satisfy these constraints. (6)

13. (a) (i) Explain the link-state algorithm in detail. (5)

(ii) Consider the network shown in Fig 1. Compute the shortest path from C to all other nodes using link-state algorithm. Also update the forwarding table of node C. (8)

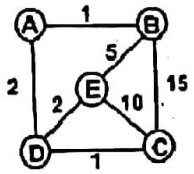

Fig. 1

Or

(b) (i) Briefly explain the Border Gateway Protocol used for Inter domain routing in internetwork. (8)

(ii) Explain multicast routing protocol DVMRP. (5)

14. (a) (i) Explain three ways of connection termination in TCP using state transition diagram. (8)

(ii) Suppose you are hired to design a reliable byte-stream protocol that uses a sliding window (like TCP). This protocol will run over a 50-Mbps network. The RTT of the network is 80 ms, and the maximum segment lifetime is 60 seconds. How many bits would you include in the AdvertisedWindow and SequenceNum fields of your protocol header? (5)

Or

(b) (i) Explain the original, Karn/Patridge and Jacobson/Karel's algorithms of adaptive retransmission in TCP. (8)

(ii) Consider a RED gateway with MaxP = 0.02, and with an average queue length halfway between the two thresholds. Find the drop probability P_{count} for count = 1 and count = 50. Also calculate the probability that none of the first 75 packets is dropped. (5)

15. (a) Explain in detail how electronic mail application is carried out in a network. Also explain the protocols used in this application. (13)

Or

(b) Briefly explain the Domain Name Service protocol with an example. (13)

PART C — (1 × 15 = 15 marks)

16. (a) A student attaches a laptop to campus network and requests/receives a web page from www.google.com. Explain the sequence of operations carried out with the help of different protocols used in application, transport, network and link layers. (15)

Or

(b) (i) How error correction is handled at different layers in an IP network? (9)

(ii) If IP provides connectionless service. How TCP supports connection-oriented service? (6)

Reg. No. A U H I P P O . C O M *

Question Paper Code : 27176

B.E./B.Tech. DEGREE EXAMINATION, NOVEMBER/DECEMBER 2015.

Fourth Semester

Computer Science and Engineering

CS 6551 — COMPUTER NETWORKS

(Common to Fifth Semester – Information Technology)

(Regulations 2013)

Time : Three hours Maximum : 100 marks

Answer ALL questions.

PART A — (10 × 2 = 20 marks)

1. State the issues of data link layer.
2. Define the term protocol.
3. Define sub-netting.
4. What is the need of ARP?
5. Identify the class of the following IP Address :
   (a) 110.34.56.45
   (b) 212.208.63.23
6. Define routing.
7. What is the difference between congestion control and flow control?
8. What do you mean by QOS?
9. Mention the types of HTTP messages.
10. What is SMTP?

PART B — (5 × 16 = 80 marks)

11. (a) Draw the OSI network architecture and explain the functionalities of every layer in detail. (16)

Or

(b) Explain the various flow control mechanisms. (16)

12. (a) Write short notes on :

(i) Ethernet. (8)

(ii) Wireless Lan. (8)

Or

(b) Explain in detail ARP, DHCP,ICMP. (16)

13. (a) Describe distance vector routing. (16)

Or

(b) Explain multicast routing in detail. (16)

14. (a) With neat architecture, explain TCP in detail. (16)

Or

(b) Explain TCP congestion control methods. (16)

15. (a) Explain in detail of about domain name system. (16)

Or

(b) Write short notes on the following :

(i) Email. (8)

(ii) HTTP. (8)

	Part A/Unit 1
	THE 8086 MICROPROCESSOR Introduction to 8086 – Microprocessor architecture – Addressing modes - Instruction set and assembler directives – Assembly language programming – Modular Programming - Linking and Relocation - Stacks - Procedures – Macros – Interrupts and interrupt service routines – Byte and String Manipulation.
1	**What are the types of instruction sets of 8086 microprocessor?** There are eight types of instructions. They are ✓ Data copy/Transfer instructions ✓ Arithmetic & Logical instructions ✓ Branch instructions ✓ Loop instructions ✓ Machine control instructions ✓ Flag manipulation instructions ✓ Shift & rotate instructions ✓ String instructions
2	**What are flag manipulation instructions?** The instructions that directly modify the flags of 8086 are called as the flag manipulation instructions. E.g.: CLC --- clear carry flag, CMC --- complement carry flag, STC --- set carry flag , CLD --- clear direction flag
3	**Explain the instructions LODS & STOS.** a)LODS: Load String Byte or String Word ✓ The LODS instruction loads the AL/AX register by the content of a string pointed to by DS: SI registers pair. ✓ The SI is modified automatically depending on direction flag. If it is a byte transfer (LODSB), the SI is modified by one & if it is a word transfer (LODSW), the SI is modified by two. ✓ No other flags are affected by this instruction. b)STOS: Store String Byte or String Word ✓ The STOS instruction stores the AL/AX register contents to a location in the string pointed by ES: DI register pair. ✓ The DI is modified accordingly. ✓ No flags are modified by this instruction.
4	**Define control transfer instruction & explain their types**. The instructions that transfer the flow of execution of the program to a new address specified in the instruction directly or indirectly are called the control transfer or branching instructions. They are of two types. **Unconditional control transfer instructions**: In these types of instructions, the execution control is transferred to the specified location independent of any status or condition. **Conditional control transfer instructions**: In these instructions, The control is transferred to the specified location provided the result of the previous operation satisfies a particular condition, otherwise, the execution continues in normal flow sequence.
5	**What are assembler directives? Give example.** The assembler is a program used to convert an assembly language program into the equivalent machine code modules that may be further converted to executable codes. Therefore the hints given to the assembler to complete all these tasks in some predefined alphabetical strings is called an assembler directive. E.g.: DB------define byte, END----end of program, EQU-----equate

6	**What is the function of parity flag? (Nov 2013)** The parity flag is set, if the result of the byte operation or lower byte of the word operation contains an even number of ones.
7	**Define a MACRO.** A number of instructions appearing again & again in the main program can be assigned as a macro definition (i.e.) a label is assigned to the repeatedly appearing string of instructions. The process of assigning a label or macro name to the string is called defining a macro. A macro within a macro is called a nested macro.
8	**Which interrupt has got the highest priority among all the external interrupts?** The Non-Maskable Interrupt pin of 8086 has got the highest priority among the external Interrupts.
9	**What are the segments registers present in 8086?** There are four segment registers in 8086.They are i. Code Segment register (CS) ii. Data Segment register (DS) iii. Extra Segment register (ES) iv. Stack Segment register (SS)
10	**What do you mean by instruction pipelining?** While the execution unit executes the previously decoded instruction, the Bus Interface Unit fetches the next instruction and places it in the pre fetched instruction byte queue. This forms a pipeline.
11	**What is the use of the Trap flag in the flag register of 8086?** When the Trap flag is set, the processor enters the single step execution mode. A trap interrupt is generated after execution of each instruction. The processor executes the current instruction and the control is transferred to the Trap interrupt service routine.
12	**List the instruction formats in 8086 instruction set.** There are six general formats of instruction in 8086.They are ✓ One byte instruction. ✓ Register to Register. ✓ Register to/from Memory with no Displacement. ✓ Register to/from memory with Displacement. ✓ Immediate operand to Register. ✓ Immediate operand to Memory with 16-bit Displacement.
13	**What are the addressing modes of sequence control transfer instructions in 8086? Give example.(Apr/May 2018)** ✓ Immediate eg: Mov AX,0005H. ✓ Direct eg:Mov AX,[5000H]. ✓ Register eg:Mov BX,AX. ✓ Register Indirect eg:Mov AX,[Bx]. ✓ Indexed eg:Mov AX,[SI]. ✓ Register Relative eg:Mov AX,50H[BX]. ✓ Based Indexed eg:Mov AX,[Bx] [SI]. ✓ Relative Based Indexed eg: Mov AX,50H [BX] [SI].
14	**Give the operation of CBW and TEST instructions of 8086? (Nov 2013)** CBW instruction converts the byte in AL to word value in AX by extending the sign of AL throughout the register AH. TEST instruction performs logical AND operation of the two operands updating the flag registers without saving the result
15	**What do you mean by addressing modes? (May 2014)** The addressing modes clearly specify the location of the operand and also how its location may be determined.

16 How is the physical address generated in 8086? (or) How 16 bit address is converted into 20 bit address in 8086? (Nov 2013) (Apr/May 2017)

The content of the segment register called as segment address is shifted Left bit-wise four times and to this result, content of an offset register also called as offset address is added, to produce a 20-bit physical address.

eg:	segment address	1005H
	Offset address	5555H
	Segment address	0001 0000 0000 0101
	Shifted by 4 bit positions	0001 0000 0000 0101 0000
		+
	Offset address	0101 0101 0101 0101
	Physical address	0001 0101 0101 1010 0101
		1 5 5 A 5

17 What are intersegment and intra segment modes of addressing?

For control transfer instructions, if the location to which the control is transferred lies in a different segment other than the current one, the mode is called intersegment mode.

If the destination location lies in the same segment, the mode is called intra segment mode.

18 Explain XLAT instruction.

- ✓ The XLAT (Translate) instruction replaces a byte in the AL register with a byte from a 256-byte, user coded translation table.
- ✓ XLAT is useful for translating characters from one code to another like ASCII to EBCDIC and ASCII to HEX etc.

19 Draw the PSW format for 8086.(May/June 2016)

B15	B14	B13	B12	B11	B10	B9	B8	B7	B6	B5	B4	B3	B2	B1	B0
U	U	U	U	OF	DF	IF	TF	SF	ZF	U	AF	U	PF	U	CF

U: Undefined; CF : Carry flag - Set by carry out of MSB

PF: Parity flag- set if result has even parity; AF : Auxiliary carry flag - used for BCD operation; ZF: Zero flag - set if result = 0; SF : Sign flag - set if result is –ve.

TF : Trap flag - set to enable single step execution mode. IF: Interrupt flag- set to enable interrupt ;DF : Direction flag - set to enable auto decrement mode for string operation ;OF: Overflow flag - used for signed arithmetic operation

20 Explain the function of TEST pin in 8086

This input is examined by a "WAIT" instruction. When the processor executes WAIT instruction, it enters into wait state (Idle state). If the TEST pin goes low, the processor will come out from the idle state and continues the execution; otherwise it remains in an idle state.

21 What is meant by a vectored interrupt? (May 2014)

There is an interrupt vector table which stores the information regarding the location of interrupt service routine (ISR) of various interrupt. Whenever an interrupt occurs the memory location of ISR is determined using the vector table and the program control branches to ISR after saving the flags and the program location.

22 What are control transfer instructions?

These instructions transfer control to some predefined address specified in the instruction after their execution. Eg: CALL, INT, RET & JUMP instructions.

23 Define a MACRO. (Nov/Dec 2017)

A number of instructions appearing again & again in the main program can be assigned as a macro definition (i.e.) a label is assigned to the repeatedly appearing string of instructions. The process of assigning a label or macro name to the string is called defining a macro. A macro within a macro is called a nested macro.

24	**What are the advantages of the segmented memory scheme in 8086?** The following are the advantages of the segmented memory scheme ✓ Allows the memory capacity to be 1 Mbytes although the actual addresses to be handled are of 16-bit size. ✓ Allows the placing of code, data and stack portions of the same program in different parts of memory, for data and code protection.
25	**Write about the different types of interrupts supported in 8086. . (May 2015)** Interrupts in 8086 are classified into three. They are: ✓ Pre defined interrupt Type 0 to Type 4 interrupts. ✓ Hardware interrupt Mask able interrupt and Non Mask able interrupt ✓ Software interrupt(INT n) 256 types of software interrupt.
26	**Define Stack. (May/June 2016) (Apr/May 2018)** A stack pointer is a small register that stores the address of the last program request in a stack. A stack is a specialized buffer which stores data from the top down. As new requests come in, they "push down" the older ones.
27	**List the modes of operation of 8086.(Nov/Dec 2017)** Maximum mode and minimum mode.
28	**What is the need for interrupts in microprocessor operation?(Nov/Dec 2018)** Interrupts are signals sent to the CPU by external devices, normally I/O devices. They tell the CPU to stop its current activities and execute the appropriate part of the operating system. Hardware Interrupts are generated by hardware devices to signal that they need some attention from the OS.
29	**What are Byte and String Manipulations? (Nov/Dec 2018)** String is a series of data byte or word available in memory at consecutive locations. It is either referred as byte string or word string. Their memory is always allocated in a sequential order. Instructions used to manipulate strings are called string manipulation instructions. The string instructions of the 8086 permit a programmer to implement operations such as to move data from one block of memory to a block elsewhere in memory. A second type of operation that is easily performed is to scan a string and data elements stored in memory looking for a specific value.
	PART B/ UNIT I
1	Discuss in detail the three types of interrupt system of Intel 8086/ Describe the interrupts of 8086 and its types with service routine **(May 2014) (Apr/May 2018)(Nov/Dec 2017)**
2	Explain the memory concepts of Intel 8086 and explain how data transfer takes place.
3	Describe the addressing modes 8086 with examples from instruction set of 8086. **(Apr/May 2016)(Nov/Dec 2018)**
4	Write an 8086 ALP to find the sum of numbers in an array of 10 elements.(7) **(Apr/May 2016)**
5	Write an 8086 ALP to logically shift a 16 bit number stored in location starting at 8000H twice to the right. Store the result in A000 H.
6	Explain the different instruction used for input and output operation in I/O mapped I/O mode of 8086.
7	Discuss in detail the hardware and software feature of 8086 interrupt structure. **(Apr/May 2016)**
8	i) Write an 8086 ALP to sort out any given ten numbers in ascending and descending order. **(Nov 2013)** ii) Give the functions of NMI, BHE and TEST pins of 8086. (4) **(Nov 2013)**

9	What is meant by memory segmentation? What are the advantages of memory segmentation?
10	i)Explain briefly about internal hardware architecture of 8086 microprocessor with a neat diagram.(10) (**Nov/Dec 2017**) (Apr/May 2018) ii) Write a 8086 assembly language program to convert BCD data - Binary data.(6) **(May 2015) (Apr/May 2017)**
11	i) Explain about ASSUME, EQU, DD assembler directives.(8) **ii)** Explain briefly about interrupt handling process in 8086.(8) **(May 2015)**
12	For 8086 Microprocessor what are the instruction set and assembler directives?**(Nov/Dec 2018)**
	Part A/Unit II
	8086 SYSTEM BUS STRUCTURE **9** 8086 signals – Basic configurations – System bus timing –System design using 8086 – I/O programming – Introduction to Multiprogramming – System Bus Structure - Multiprocessor configurations – Coprocessor, Closely coupled and loosely Coupled configurations – Introduction to advanced processors.
1	**What is meant by multiprocessor system?** If a microprocessor system contains two or more components that can execute instructions independently then the system is called as multiprocessor system.
2	**What is meant by multiprogramming? (Apr/May 2017)(Apr/May 2018)** Multitasking has the same meaning of multiprogramming but in a more general sense, as it refers to having multiple (programs, processes, tasks, threads) running at the same time. This term is used in modern operating systems when multiple tasks share a common processing resource (e.g., CPU and Memory). Multiprogramming is a rudimentary form of parallel processing in which several programs are run at the same time on a uniprocessor. Since there is only one processor, there can be no true simultaneous execution of different programs.
3	**What is closely coupled configuration?** If the processor supporting processor, clock generator, bus control logic, memory and I/O System, communicate shared memory then it is called closely coupled system.
4	**What the advantages are of loosely coupled?** ✓ Better system throughput by having more than one processor. ✓ A greater degree of parallel processing can be achieved. ✓ System structure is more flexible. ✓ A failure in one module does not cause any breakdown of the system.
5	**What is meant by cross bar switch?** If the number of buses in a common bus system is increased, a point is reached at which there is a separate path available for each memory module. This interconnection is called as crossbar switch.
6	**Mention some network topologies?** ✓ The bus. ✓ The star. ✓ The star wires ring (Token Ring)
7	**Compare closely coupled and loosely coupled configurations. (Apr/May 2016)**

It perform better and size is small when compared	Less expensive
More expensive	Here single standalone processor is used connected via interconnected network
It contains multiple CPUs	Data rate is low.
Data rate is high	Data rate is low.

7	**What is meant by memory contention & hot spot contention?** ✓ A memory module can handle only one access request at a time. Hence when several processors request the same memory module it gives rise to memory contention. ✓ When several processors repeatedly across the same memory location, it gives rise to hot spot contention.
8	**Name some techniques for reducing contentions** ✓ Local memories. ✓ Better interconnection network. ✓ Cache memory. ✓ Memory Allocation.
9	**What is meant by bus arbitration?** The mechanism which decides the selection of current master to access bus is known as bus arbitration.
10	**What are the advantages of Daisy Chaining?** ✓ It is simple and cheaper method ✓ It requires the least number of lines and this number is independent of the number of masters in the system.
11	**What is meant by bus arbitration?** The mechanism which decides the selection of current master to access bus ia called bus arbitration.
12	**What is meant by Numeric processor?** The numeric processor 8087 is a coprocessor which has been specially designed to work under the control of the processor 8086 and to support additional numeric processing capabilities.
13	**On which data types can memory operands operate?** 1. Word integer, 2.Short integer, 3.Long integer, 4.Packed BCD, 5.Short real, 6Long Real 7. Temporary real
14	**What is the use of TC STOP Mode?** If the TC Stop bit is set the channel is disabled after the TC output goes high, thus automatically preventing further DMA Operation on that channel.
15	**What are advantages of coprocessor? (May 2014)** The co-processors & supplementary processors which can fetch operands & execute it**.** It can read CPU status & queue status, make bus and interrupt request, receive reset & ready signals, receive bus grants, maintain an instruction queue decode the external op code.
16	**What is co-processor? (Nov 2013)** The 8086/8088 must be supplemented with co-processors that extend the instruction set to allow the necessary special computations to be accomplished more efficiently. Eg: 8087 Numeric Data Processor.
17	**What is a Floating point Coprocessor? (Nov 2013)** The floating point coprocessor uses real data types or floating point types of the following format: Real data $X=\pm 2^{exp}\times$mantissa, which may vary from extremely small to extremely large values.
18	**What is meant by loosely coupled configuration? (May 2014) (Apr/May 2016)** In a loosely coupled multiprocessor system each CPU has its own bus control logic and bus arbitration is resolved by extending this logic and adding external logic that is common to all the modules.
19	**Write some example for advanced processor. (Apr/May 2017)(Nov/Dec 2017)** ARM Processor AMD Processor SHARC processor.

20	**Differentiate external vs. internal bus. (Apr/May 2016)** The internal data bus is the one responsible for transferring the data between the data registers and each other or between the data registers and the CPU. The external data bus transfers the data between the internal registers and the external memory or directly to the output.
21	**Define Bus. Why Bus request and cycle stealing are required? (May 2015)** Bus is a group of parallel conductors which carries data, address and control signals from one unit to another unit. Bus request and Cycle stealing are required to access the RAM without interfering with the CPU. It is similar to DMA for allowing I/O controllers to read or write RAM without CPU intervention.
22	**Define system bus.(Nov/Dec 2018)** The system bus is a pathway composed of cables and connectors used to carry data between a computer microprocessor and the main memory. The busprovides a communication path for the data and control signals moving between the major components of the computer system.
23	**Draw the read cycle timing diagram for minimum mode. (May 2015)** 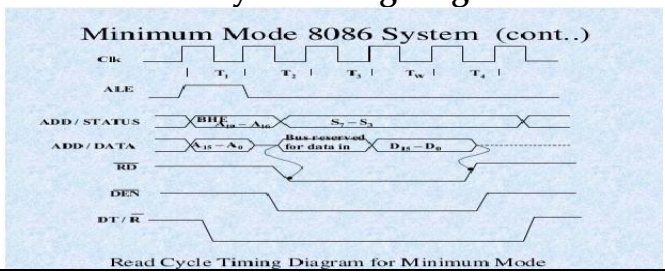 Read Cycle Timing Diagram for Minimum Mode
24	**What is the need of LOCK Signal? (Nov/Dec 2017)** It indicates to another system bus master, not to gain control of the system bus while LOCK is active Low. The LOCK signal is activated by the "LOCK" prefix instruction and remains active until the completion of the instruction. This signal is active Low and floats to tri-state OFF during 'hold acknowledge.
25	**When is co-processor used?(Nov/Dec 2018)** A coprocessor is a computer processor used to supplement the functions of the primary processor (the CPU). It is used to perform Operations such as floating point arithmetic, graphics, signal processing, string processing, cryptography or I/O interfacing with peripheral devices.
26	**List two differences between maximum mode and minimum mode configuration of 8086.(Apr/May 2018)**

Maximum mode	Minimum mode
When MN/MX (bar) is low 8086 is in maximum mode.	When MN/MX (bar) is high 8086 is in minimum mode.
In maximum mode 8086 generates QS1, QS0, S0 (bar), S1 (bar), S2 (bar), LOCK (bar), RQ (bar), GT1, RQ (bar)/GT0 control signals.	In minimum mode 8086 generates INTA (bar), ALE, DEN (bar), DT/R (bar), M/IO (bar), HLDA, HOLD and WR (bar), control signals.
So clearly there are multiple processes in the system.	There is only one processor in the system minimum mode.
In maximum mode interfacing, master/slave and multiplexing and several such control signals are required.	In minimum mode no interfacing or master/slave signal is required.
In maximum mode a bus controller is required to produce control signals. This bus controller produces MEMRDC, MEMWRC, IOWRC, ALE, DEN, DT/R control signals.	In maximum mode direct RD WR signals can be used. No bus controller required. A simple de-multiplexing would do the job of producing the control signals. The de-multiplexer produces MEMRD, MEMWR, IORD, IOWR control signals.

	Part B/Unit II
1.	How do you classify the instruction set of 8089 IOP?
2.	Explain the instruction set of IOP Explain the bus interfacing controller used with Coprocessor.
3.	Draw the functional block diagram of the I/O Processor (8089) and explain its working in the remote mode. **(Nov 2013) & (May 2014)**
4.	Explain system bus structure and timings in 8086. **(Apr/May 2016.2017) (Nov/Dec 2017)(Nov/Dec 2018)**
5.	What is a bus arbiter? Explain the functions of bus arbiter and briefly explain the addressing modes supported by 8089 I/O processor.
6.	Write an 8086 assembly language program to get an input from the keyboard for 2 digits and i) Convert that input into a hexa decimal number using BIOS interrupt. (8) **(May 2014)** ii) Write an 8086 assembly language program to multiply 2 digit numbers by getting an input from the keyboard using BIOS interrupt call. (8)
7.	Explain the execution steps of 8087 coprocessor. (8) **(May 2014) (Apr/May 2016)** (i) Explain the closely coupled configuration of multi-processor configuration with Suitable diagram. **(May 2015) (Apr/May 2016) (Apr/May 2017)** Draw the pin details of 8086 and explain the function of each pin.
8.	Discuss the maximum mode configuration of 8086 with a neat diagram. Mention the functions of various signals. (16) **(May 2015)(Apr/May 2018)**
9.	Write an 8086 assembly language program to check whether the given string is palindrome.
10.	Explain the following: **(Apr/May 2016)** Multiprogramming Semaphore
11.	Draw the timing diagram for interrupt acknowledgement cycle **(Apr/May 2017)(Nov/Dec 2017)**
12	Explain the loosely coupled configuration of multi-processor configuration with suitable diagram**(Nov/Dec 2017)**
13	Discuss about the multiprocessor configurations of 8086**.(Apr/May 2018)**
14	Distinguish between closely coupled and loosely coupled multiprocessor configurations.**(Nov/Dec 2018)**
	Part A/ Unit III
	I/O INTERFACING 9 Memory Interfacing and I/O interfacing - Parallel communication interface – Serial communication interface – D/A and A/D Interface - Timer – Keyboard /display controller – Interrupt controller – DMA controller – Programming and applications Case studies: Traffic Light control, LED display , LCD display, Keyboard display interface and Alarm Controller.
1	**Name the Command word to set bit PC, using BSR mode.** 0 | D6 | D5 | D4 | D3 | D2 | D1 | D0 D6,D5,D4 – Don't Care D3,D2,D1- Bit Select Do- Bit set. Reset
2	**Why the 8255A is designed so that only the bits in PORT C can be set/reset?** Since the pins are designed to activate for selecting Port A and Port B.
3	**What is key bouncing? (Apr/May 2016)** When a key is pressed the contact bounce back and forth and settle down only after a small time delay (about 20ms). Even though a key is actuated once, it will appear to have been actuated several times. This problem is called Key Bouncing

4	**What is the use of BSR mode in 8255** It is used for setting and Reset the Bits
5	**List the advantages and disadvantages of parallel communication over serial communication. (Apr/May 2016)** For transferring data between computers, laptops two methods are used, namely, Serial Transmission and Parallel Transmission. There are some similarities and dissimilarities between them. One of the primary differences is that; in Serial Transmission data is sent bit by bit whereas, in Parallel Transmission a byte (8 bits) or character is sent.
6	**How many I/O devices with a word length of 1 bit can be connected to 8255 PPI** 8 I/O devices can be connected to 8255 PPI
7	**How does 8255 PPI discriminate between the memory section data and I/O section data** The 8255 PPI discriminate between memory section data and I/O Section by use of the Address lines and by use of the decoder.
8	**What is the function of STB and OBF signal in the 8255 when programmed for mode –1 operation?** The input device activates this signal to indicate CPU that the data to be read is already sent on the port lines of 8255 port.
9	**Name the major block of 8259 Programmable Interrupt Controller.** The major blocks are1.Interrupt service register , 2.Priority resolver, 3.Interrrupt Request Register, 4.Interrupt Mask Register
10	**What are the modes of operation of 8259 Interrupt Controller?** 1. Fully Nested Mode, 2.Special Fully Mode, 3.Rotating Priority Mode, 4.Special masked Mode, 5.Polled Mode.
11	**What is the maximum number of devices that can be connected to interrupt mode** We can connect 8 Devices in the interrupt mode
12	**Mention the function of SP/EN signal in the 8259 PIC.** With the help of SP/EN signal it can either be operated in Master mode and Salve Mode
13	**Why CAS2-CAS0 lines on 8259 PIC are bi-directional?** CAS2-CAs0 is used for selecting one of the possible slaves that can be connected.
14	**What is the use of address enable (AEN) pin of 8257 DMA Controller?** ALE is used to differentiate between the Address and Data Signals.
15	**What is the use of the READY input of the DMA controller?** When the READY PIN is high the data connected to the external devices can be activated.
16	**What is the purpose of the IC 8257?** IC 8257 is used for transferring the data from memory to the CPU
17	**What are TC and MARK signal in a DMA controller?** TC is used for denoting that Terminal count of the data has been reached. MARK is used to indicate the frames that can be sent
18	**List the four possible modes of operation in 8237 DMA controller.** 1.Rotating Priority Mode, 2.Fixed Priority Mode, 3.Extended Write Mode, 4.TC Stop Mode 5.Auto Load Mode
19	**What is an USART?** Universal Synchronous and asynchronous Receiver and Transmitter is used for transmitting and Receiving data.
20	**What are the operating modes of 8255? (Nov/Dec 2013)** Mode-0, Mode-1 and Mode-2.
21	**List the features of Memory Mapped I/O. (May/Jun 2014)** ✓ The device registers can be accessed and manipulated with any instruction or addressing mode. ✓ The maximum number of available memory locations is reduced.

22 **What is bus stealing? (Nov/Dec 2013)**

During DMA data transfer, the I/O component connected to the system bus is given control of the system bus for a bus cycle. This is called bus stealing or cycle stealing.

23 **What are the advantages of Programmable Interval Timer/Counter IC? (May/Jun 2014)**

- ✓ Interrupt a time sharing operating system at evenly spaced intervals.
- ✓ Output precisely timed signals with programmed period to an I/O device.
- ✓ Count the number of times an event occurs in an external experiment.
- ✓ Cause the processor to be interrupted after a programmable number of external events have occurred.

24 **Give the Various modes and Applications of 8254. (May/Jun 2015)(Apr/May 2018)**

- ✓ MODE 0 : Interrupt on terminal Count (can be used as Interrupt).
- ✓ MODE 1 : Hardware re trigger able One shot (For generating One shot Pulse)
- ✓ MODE 2 : Rate Generator (The mode is used to generate a pulse equal to given clock period at a given interval.)
- ✓ MODE 3: Square wave generator (For generating continuous square wave)
- ✓ MODE 4: Software triggered strobe (To trigger after a specific count)
- ✓ MODE 5: Hardware triggered strobe (To Trigger by a hardware event)

25 **Draw the format of read back command register of 8254. (Apr/May 2017)**

This register is accessed when lines A0 & A1 are at logic 1. It is used to write a command word, which specifies the counter to be used, its mode, and either a read or write operation. Following table shows the result for various control inputs.

A1	A0	RD	WR	CS	Result
0	0	1	0	0	Write Counter 0
0	1	1	0	0	Write Counter 1
1	0	1	0	0	Write Counter 2
1	1	1	0	0	Write Control Word
0	0	0	1	0	Read Counter 0
0	1	0	1	0	Read Counter 1
1	0	0	1	0	Read Counter 2
1	1	0	1	0	No operation
X	X	1	1	0	No operation
X	X	X	X	1	No operation

26 **What is meant by Direct Memory Access?**

Direct Memory Access (DMA) is a capability provided by some computer bus architectures that allows data to be sent directly from an attached device (such as a disk drive) to the memory on the allows data to be sent directly from an attached device (such as a disk drive) to the memory on the computer's motherboard. The microprocessor is freed from involvement with the data transfer, thus speeding up the overall computer.

27 **What is meant by control register?**

A control register is a processor register which changes or controls the general behavior of a CPU or other digital device. Common tasks performed by control registers include interrupt control, switching the addressing mode, paging control, and coprocessor control.

28 **What are the differences between LED display and LCD display?(Nov/Dec 2018)**

LED	**LED**
PN-Junction device which discharge visible lights when an electrical charge passes through it.	PN-Junction device which discharge visible lights when an electrical charge passes through it.
No backlight	No backlight
High Resolution	High Resolution
Small display area	Small display area

29	**Write a 16 bit delay program in 8086 (Apr/May 2018)** LOOP1: MOV DI, 01ADH LOOP: MOV BP, FFFFH NOP NOP NOP DEC BP JNZ LOOP1 DEC DI JNZ LOOP
30	**What are the handshake signals used in Mode – 2 configuration of 8255? (Nov/Dec 2017)** Only port A can be initialized in this mode. Port A can be used for bidirectional handshake data transfer. This means that data can be input or output on the same eight lines (PA0 - PA7). Pins PC3 - PC7 are used as handshake lines for port A. The remaining pins of port C (PC0 - PC2) can be used as input/output lines if group B is initialized in mode 0 or as handshaking for port B if group B is initialized in mode 1. In this mode, the 8255 may be used to extend the system bus to a slave microprocessor or to transfer data bytes to and from a floppy disk controller. Acknowledgement and handshaking signals are provided to maintain proper data flow and synchronization between the data transmitter and receiver.
31	**How DMA operation is performed with 8086. (Nov/Dec 2017)** The 8086 microprocessor receives bus requests through its HOLD pin and issues grants from the hold acknowledge (HLDA) pin. A request is made when a potential master sends a 1 to the HOLD pin. Normally, after the current bus cycle is complete the 8086 will respond by putting a 1 on the HLDA pin. When the requesting device receives this grant signal it becomes the master. It will remain master until it drops the signal to the HOLD pin, at which time the 8086 will drop the grant on the HLDA pin.
32	**Why is memory interfacing required?(Nov/Dec 2018)** While executing an instruction, there is a necessity for the microprocessor to access memory frequently for reading various instruction codes and data stored in the memory. The interfacing circuit aids in accessing the memory. Memory requires some signals to read from and write to registers.
	Part B/Unit III
1	With a block diagram of internal structure of 8255 PPI and explain the functions of each block Illustrate the 8255 mode 1 output and input port timings. **(Apr/May 2017)**
2	With a neat block diagram explain the function of each block of a programmable interrupt controller. **(Nov/Dec 2018)**
3	Draw the block diagram of DMA controller IC and explain the function of each block. **(May 2015) & (May 2014) (Apr/May 2016) (Apr/May 2017)(Nov/Dec 2018)**
4	With a block schematic explain how a (4x4) matrix hex keyboard can be interfaced to a CPU using 8279 keyboard display controller? **(Nov 2013)(Nov/Dec 2017)(Apr/May 2018)**
5	Interface a D/A converter and A/D convertor with a microprocessor. Explain with a Program, how to generate a sine wave using this. **(May 2015)(Nov/Dec 2018)**
6	Describe with MODE 0 and MODE 3 configurations of 8254 timer in detail.(8) (ii) Draw and explain the operation of a sample and hold circuit. (4) (iii) Show the control word format of 8255 and explain how each bit is programmed.**(4)**
7	(i) Explain the mode 0 operation of 8255 Programmable Peripheral interface. (8) (May 2014) (ii) Explain the different modes of operation of timer. (8)

8	(i) Bring about the features of 8251. (6) **(Nov 2013)** (ii) Discuss how 8251 is used for serial data communication. (6) (iii) Explain the advantages of using the USART chips in microprocessor based systems. (4)
9	Draw and explain the block diagram of alarm controller. **(Apr/May 2016)(Apr/May 2018)**
10	Explain design of Traffic Light Controller using 8086 microprocessor in detail. Write the algorithm and ALP for traffic light control system. **(May 2015)(Apr/May 2018)**
11	Draw and explain the functional diagram of 8251**.(Nov/Dec 2017)(Apr/May 2018)**
	Part A/Unit IV
	MICROCONTROLLER **9** Architecture of 8051 – Special Function Registers(SFRs) - I/O Pins Ports and Circuits - Instruction set - Addressing modes - Assembly language programming.
1	**Discuss the salient features of 8051 family of controllers?** ✓ Eight-bit CPU with registers A (the accumulator) and B. ✓ Sixteen-bit program counter (PC) ✓ Data pointer (DPTR). ✓ Eight-bit program status word (PSW) ✓ Eight-bit stack pointer (SP). ✓ Internal ROM or EPROM (4 KB) ✓ Internal RAM (128 bytes) ✓ Four register banks (each 8 registers) ✓ 16 bytes, which may be addressed at bit level ✓ Eighty bits of general purpose data memory ✓ Two 16-bit timer / counters: T0 & T1 ✓ Full duplex serial data receivers / transmitter (SBUF) ✓ Control registers: TCON, TMOD, SCON, PCON, IP and IE.
2	**What is the size of RAM in 8051?** The size of the RAM is **128 bytes** 1. Four register banks (each 8 registers) 2. 16 bytes, which may be addressed at bit level 3. Eighty bits of general purpose data memory
3	**How many ports are available in 8051 micro controller?** There are mainly four ports available in this 8051 micro controller. They are **Port0:** serve as inputs, outputs, or, when used together, as a bi-directional low order address and as data bus for external memory. **Port1:** has got no dual functions. **Port2:** may be used as an input / output port similar in operation to port 1. The alternate use of port2 is to supply a high-order address byte in conjunction with the Port0 low-order byte to address external memory. **Port3:** is an input / output pin similar to the Port 1. In this case each and every pin has an additional function.
4	**How to select the register bank of Intel 8051. (May 2015)** RS0 and RS1 are the D3 and D4 bits present in the 8-bit register of the PSW

0	0	BANK 0 is selected from Internal ROM
0	1	BANK 1 is selected from Internal ROM
1	0	BANK 2 is selected from Internal ROM
1	1	BANK 3 is selected from Internal ROM

5 What is meant by microcontroller?

A device which contains the microprocessor with integrated peripherals like memory, serial ports, parallel ports, timer/counter, interrupt controller, data acquisition interfaces like ADC, DAC on single chip is called microcontroller.

6 List the flags of 8051 and give their usage.

Status flags: These flags are modified according to the result of arithmetic and logical operations. 1. Carry flag, 2. Auxiliary carry flag, 3. Overflow flag, 4. Parity flag and General purpose user flags: These flags can be set or cleared by the programmer as desired 1. Flag 0, 2. GF0, 3. GF1

7 What is the difference between microprocessor and microcontroller? (May 2014)(Nov/Dec 2018)

It has only CPU	It has CPU, memory, timers, parallel and serial I/O port on single chip
It has few bit manipulating instructions	It has large number of bit manipulating instructions
It has more number of instructions for transferring data from external memory.	It has only few instructions for transferring data from external memory.
No special function registers are available	Special functions registers are available

8 Draw the PSW of 8051. (May 2015)

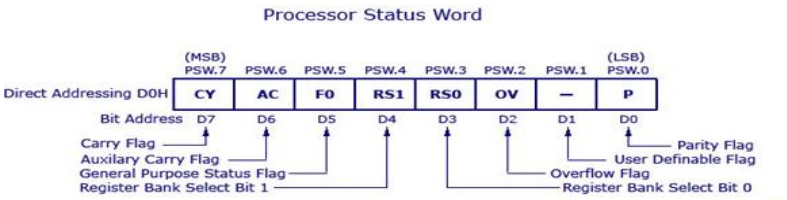

9 Compare the 8051, 8031 and 8751 microcontrollers.

8051	8031	8751
On-chip program memory(ROM) available -4KB	No on-chip ROM	On-chip program memory(EPROM) available

10 List any applications of Microcontroller.

1. Building control(Fire detection)
2. Industrial control (Process control)
3. Motor speed control(Stepper motor control)
4. Stand alone devices(Color Xerox machine)

Automobile applications (Power steering)

11 What is the function of DPTR register?

The data pointer (DPTR) is the 16-bit address register that can be used to fetch any 8 bit data from the data memory space. When it is not being used for this purpose, it can be used as two eight bit registers, DPH and DPL

12 What is the significance of EA line of 8051 microcontroller? (May/Jun 2014)

When there is no on-chip ROM in microcontroller and EA pin is connected to GND, it indicates that the code is stored in external ROM.

13 What is the difference between MOVX and MOV ? (Nov/Dec 2013)

The MOV instruction is used to access code space of on-chip ROM and MOVX instruction is used to access data space or external memory.

14 How is memory organized in 8051?

8051 can access up to 64kb of program memory and 64kb of external data memory and internal data RAM locations.

15	**What are the different ways of operand addressing in 8051? (Apr/May 2016)** Different ways of addressing modes are**1)** Immediate addressing mode **2)** Direct addressing mode **3)** Register direct addressing mode **4)** Register indirect addressing mode **5)** Indexed addressing mode.

16	**Write an 8051 ALP to toggle P1 a total of 200 times. Use RAM location 32H to hold your counter value instead of registers R0-R7. (Apr/May 2016)**
	MOV P1,#55H ;P1=55H
	MOV 32H,#200 ;load counter value into RAM loc 32H
	LOP1: CPL P1 ;toggle P1
	ACALL DELAY
	DJNZ 32H,LOP1 ;repeat 200 times

17	**Mention some of the 8051 special function register.** ACC: Accumulator, B: B-Register, PSW: Program Status Word, SP: Stack Pointer, DPTR: Data Pointer, IE: Interrupt Enable, SCON: Serial Control, PCON: Power Control.
18	**What is the function of XTAL 1 and XTAL 2 pins?** 8051 internal clock circuit. In this crystal of proper frequency can be connected to these two pins. XTAL 1 is connected to GND and oscillator signal is connected to XTAL 2.
19	**Write an ALP to add the values ABH and 47H. Store the result in R1.** MOV A, #AB H ADD A, #47 H MOV R1, A L1: SJMP L1
20	**Write the instruction to use registers of bank 3.** SETB PSW.4 SETB PSW.3
21	**How is RAM memory space allocated in 8051?** 1. 32 bytes from 00 to 1F H is for register bank and stack. 2. 16 bytes from 20H to 2FH is for bit addressable read/write memory 3. 80 byte 30H to 7FH is for scratch pad
22	**Differentiate overflow flag and carry flag.** Carry flag is used to detect error in unsigned arithmetic. Carry flag is used to detect error in unsigned arithmetic.
23	**What is the purpose of overflow flag?** The overflow flag is usually a single bit in a system status register used to indicate when an arithmetic overflow has occurred in an operation, indicating that the signed two's-complement result would not fit in the number of bits used for the operation (the ALU width).
24	**What is the difference between LCALL and ACALL instructions?** The ACALL instruction calls a subroutine located at the specified address. The PC is incremented twice to obtain the address of the following instruction. The 16-bit PC is then stored on the stack (low-order byte first) and the stack pointer is incremented twice. No flags are affected. The LCALL instruction calls a subroutine located at the specified address. This instruction first adds 3 to the PC to generate the address of the next instruction. This result is pushed onto the stack low-byte first and the stack pointer is incremented by 2. The high-order and low-order bytes of the PC are loaded from the second and third bytes of the instruction respectively. Program execution is transferred to the subroutine at this address. No flags are affected by this instruction.
25	**What is the operation of the given 8051 microcontroller instruction XRL A?** The XRL instruction performs a logical exclusive OR operation between the specified operands. The result is stored in the destination operand.

26	**Write a program to perform multiplication of 2 numbers using 8051?**
	MOV A, #data1
	MOV B, #data2
	MUL AB
	MOV DPTR, # 4500H
	MOVX @ DPTR, A
	INC DPTR
	MOV A,B
	MOVX @ DPTR, A
	STOP : SJMP STOP

27	**Write a program to perform 2's complement of a given number using 8051?** MOV DPTR, # 4500H MOVX A, @ DPTR CPL A ADD A,#01H INC DPTR STOP : SJMP STOP
28	**Which port used as multifunction port? List the signals. (Apr/May 2017)** Port 3 has multifunction port. Each pin of port 3 has i/o or as of one of the alternate function. Signals are: P3.0– RXD P3.1– TXD P3.4– T0 P3.5- T1
29	**Illustrate the CJNE instruction (Apr/May 2017)** **CJNE-** Compare and jump if not equal. This instruction compares the magnitudes of the source byte and the destination byte.
30	**Illustrate the DJNZ instruction? (Nov/Dec 2017)** The DJNZ instruction decrements the byte indicated by the first operand and, if the resulting value is not zero, branches to the address specified in the second operand. Eg: DJNZ Rn, offset.
31	**Draw the pin diagram of 8051.(Apr/May 2018)** 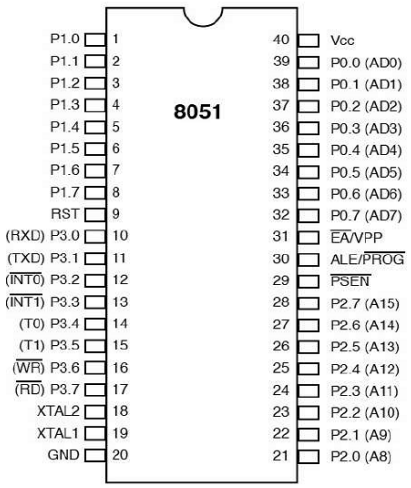
32	**How to set 8051 in Idle mode? (Nov/Dec 2017)** In Idle Mode, only the clock provided to CPU gets deactivated , whereas peripherals clock will remain active in this mode. Hence power saved in power down mode is more than in idle mode. 8051 has power control register for power control.

33	**What are the manipulation instructions? Give two examples.(Apr/May 2018)** Bit Handling (Bit Manipulation) is the act of algorithmically manipulating bits or other pieces of data shorter than a word. 8051 microcontroller supports bit manipulation. The following are the bit handling instructions supported by 8051. **CLR bit.** Zero the specified bit. **SETB bit.** Putting a specified bit. **CPL bit.** Complement the bit indicated. ANL C. AND (Y) between the carry logic and the bit indicated. ORL C. OR (O) and carry logic between the specified bit.
34	**What are the Addressing Modes for a Micro Controller?(Nov/Dec 2018)** In 8051 There are six types of addressing modes. ✓ Immediate Addressing Mode ✓ Register Addressing Mode ✓ Direct Addressing Mode ✓ Register Indirect Addressing Mode ✓ Indexed Addressing Mode ✓ Implied Addressing Mode
	Part B/Unit IV
1	Draw & explain the pin configuration of 8051 in detail (**May 2014)(Nov/Dec 2018)**
2	Explain in detail the different addressing modes supported by 8051.(Apr/May 2018)
3	Draw the architecture of 8051 and explain.(16) **Apr/May 2016)(Nov/Dec 2017)(Apr/May 2018)**
4	Write an 8051ALP to create a square wave of 66% duty cycle on bit 3 of port1.**(Apr/May 2016)**
5	Explain the instruction set of 8051? **(May 2015)**
6	Explain the I/O structure of 8051 (8) **(Nov 2013) (May 2014)**
7	List the special function registers of 8051 TMOD, SMOD and explain their functions. **(May 2015)(Nov/Dec 2018)**
8	Explain the significance of SFR's in 8051.
9	Write an 8051 ALP to sort the numbers stored in an array.
10	Explain the internal and external data memory organization of 8051. (10) **(Nov2013)**
11	Write the available SFR in 8051. Explain each register with its format and functions. (Apr/May 2017)
12	Explain the following: **(Apr/May 2017)** (i) Discuss the types of ascending mode with suitable example in 8051. (ii) Write an ALP to multiply the given number 48H and 30H.
13	Discuss the ports and its circuits of 8051.(**Nov/Dec 2017**)
14	Develop a 8086 based system with 128 RAM and 4K ROM, to display the word "HAPPY" for every 2ms in the common mode anode seven segment LED display. Explain the delay timings and Interfacing 8279 with 8086 processor**(Nov/Dec 2017)**
	Part A/Unit V
	INTERFACING MICROCONTROLLER 9 Programming 8051 Timers - Serial Port Programming - Interrupts Programming – LCD & Keyboard Interfacing - ADC, DAC & Sensor Interfacing - External Memory Interface-Stepper Motor and Waveform generation. Comparison of Microprocessor, Microcontroller, PIC and ARM processor.
1	**What is the difference between watch dog timer and ordinary timer? (Nov 2013)** The watch dog timer is provided for the system to check itself and reset if it is not functioning properly. It is a 16 bit-counter which is incremented every state time. watchdog timer is based on a counter that counts down from some initial value to zero.

2	**What is the relation between RPM and steps per second in stepper motor interfacing?** Steps per second= (rpm × steps per revolution)/60
3	**Write short notes on interrupts in 8051?** Interrupts may be generated by internal chip operations or provided by external interrupts sources. Five interrupts are provided in 8051. Three of these interrupts are generated automatically by internal operations: **Timer flag 0, Timer flag 1, and the serial port interrupts (RI or TI)**. Two interrupts are triggered by external signals provided by the circuitry that is connected to the pins INT0 and INT1 (port pins P3.2 and P3.3).
4	**What is the purpose of Interrupt priority (IP) Control register in 8051?** Register IP bits determine if any interrupt is to have a high or low priority. Bits set to 1 give the accompanying interrupt a high priority; a 0 assigns a low priority. If two interrupts with the same priority occur at the same time, then they have the following ranking: 1.IE0, 2.TF0, 3.IE1, 4.TF1,5.Serial = RI or TI.
5	**What is the purpose of counters in 8051 micro controller?** The counters have been included on the chip to relieve the processor of timing and control chores. When the program wishes to count a certain number of internal pulses or external events, a number is placed in one of the counters. The number represents the following:**(Maximum count)-(Desired count) + 1.** The counter increments from the initial number to the maximum and then rolls over to zero on the final pulse.
6	**What is the basic difference between a timer and a counter? (May 2015)** The only difference between a timer and a counter is the source of clock pulses to the counters. When used as a timer, the clock pulses are sourced from the oscillator through the divide-by-12d circuit. When used as a counter, pin T0 (P3.4) supplies pulses to counter 0, and pin T1(P3.5) to counter 1.
7	**Explain the operating mode 0 of 8051 serial port?** ✓ Mode 0 of 8051 serial port is shift register mode. ✓ Serial data enters and exits through RXD pin. ✓ Pin TXD is connected to the internal shift frequency pulse source. ✓ 8-bits are transmitted and received. ✓ The baud rate is fixed at 1/12 of the crystal frequency.
8	**Define watch dog timer.** ✓ Watch dog timer is a dedicated timer to take care of system malfunction. It can be used to reset the controller during software malfunction, which is referred to as "Hanging". A watchdog timer contains a timer that expires after a certain interval unless it is restarted. ✓ It resets the microcontroller and starts the software over from the beginning if the software does not restart it periodically.
9	**What is the function of the TMOD register?** TMOD (Timer mode) register is used to set the various timer operation modes. TMOD is dedicated solely to the two timers (T0 & T1) and can be considered to be two duplicate 4-bit registers, each of which controls the action of the timers.
10	**List out the advantages of LCD over LED.** ✓ Declining prices of LED, ✓ Ability to display numbers, characters and graphics ✓ Incorporating a refreshing controller. ✓ Ease of programming for characters and graphics.

11	**What is the significance of BUSY flag in LCD interfacing?** When D7 pin=1 and RS pin=0 the BUSY flag is set which means that LCD is busy taking care of internal operations and will not accept any new information. Therefore we have to check BUSY flag before writing data to LCD.
12	**How a pressed key is detected in keyboard interfacing?** The keyboards are organized in a matrix of rows and columns. The microcontroller grounds all rows by providing zero to the output latch then reads the columns.
13	**What is the significance of WR and INTR pin in ADC chip?** WR is an active low input and when it undergoes low to high transition the Start of conversion signal is given. INTR is an active low output pin. It is normally high when the A to D conversion is finished. It goes low to signal EOC.
14	**Write an ALP to generate a saw tooth waveform.** MOV A.#00H MOV P1,A BACK: INC A SJMP BACK
15	**What is the significance of PSEN in memory interfacing?** PSEN (Program Store Enable) is an output signal for the 8051 microcontroller, which is connected to the OE pin of external ROM containing the program code. This is used when external ROM has to be accessed.
16	**What is SBUF?** SBUF stands for SERIAL BUFFER. SBUF is physically two registers. One is write only and is used to hold the data to be transmitted out of the 8051 via TXD. The other one is read only and holds the received data from external sources via RXD.
17	**What are the serial communication modes available in 8051?** Mode 0, Mode 1, Mode 2, Mode 3 is the serial communication modes available in 8051.
18	**What are the contents of SCON register? (May 2015)** **SM0** - Serial port mode bit 0, **SM1** - Serial port mode bit 1, **SM2** - Serial port mode 2 bit multiprocessor communication enable bit; **REN** - Reception Enable bit. **TB8** - Transmitter bit 8. **RB8** - Receiver bit 8 or the 9th bit received in modes 2 and 3, **TI** - Transmit Interrupt flag & **RI** - Receive Interrupt flag.

7	6	5	4	3	2	1	0
SM0	SM1	SM2	REN	TB8	RB8	TI	RI

19	**What are the various baud rates possible in 8051 and how are they set?**

Baud rate	TH1 (Dec)	TH1 (Hex)
9600	-3	FD
4800	-6	FA
2400	-12	F4
1200	-24	E8

20	**What are the various types of sensors that can be interfaced with 8051? (Apr/ May 2018)** 1. Temperature Sensor, 2. IR Sensor, 3. Ultrasonic Sensor, 4. Touch Sensor, 5. Proximity Sensors, 6. Pressure Sensor, 7. Level Sensors, 8. Smoke and Gas Sensors.
21	**What is the significance of TCON register?** The Timer Control SFR is to configure, modify the way in which the 8051's two timers operate. This SFR controls whether each of the two timers is running or stopped and contains a flag to indicate that each timer has overflowed. Some non-timer related bits are located in the TCON SFR. These bits are used to configure the way in which the external interrupts are activated.

22	**Define Baud rate of 8051. (Apr/May 2016)** In serial communication the data is rate known as the baud rate, which simply means the number of bits transmitted per second. In the serial port modes that allow variable baud rates, this baud rate is set by timer 1. The 8051 serial port is full duplex.

23	**Write a program to generate a 10 KHz square wave using 8051?**
	MOV TMOD,#00000001B
	MAIN: SETB P1.0
	ACALL DELAY
	CLR P1.0
	ACALL DELAY
	SJMP MAIN
	DELAY: MOV TH0,#0FFH
	MOV TL0,#0CEH
	SETB TR0
	HERE:JNB TF0,HERE
	CLR TR0
	CLR TF0
	SETB P1.0
	RET
	END

24	**What is the function of IE register in 8051?** The Interrupt Enable SFR is used to enable and disable specific interrupts. The low 7 bits of the SFR are used to enable/disable the specific interrupts, where as the highest bit is used to enable or disable ALL interrupts. Thus, if the high bit of IE is 0 all interrupts are disabled regardless of whether an individual interrupt is enabled by setting a lower bit.
25	**Compare polling and interrupt. (Apr/May 2016)** Interrupt is a signal to the microprocessor from a device that requires attention. The microprocessor will respond by setting aside execution of its current task and deal with the interrupting device. When the interrupting device has been dealt with, the microprocessor continues with its original task as if it had never been interrupted. In Polling the processor continuously polls or tests every device in turn as to whether it requires attention (e.g. has data to be transferred). The polling is carried out by a polling program that shares processing time with the currently running task.

26	**Write a program to generate a 1ms delay using 8051?**
	DELAY: MOV TMOD,#00000001B
	MOV TH0,#0FCH
	MOV TL0,#018H
	SETB TR0
	HERE: JNB TF0,HERE
	CLR TR0
	CLR TF0
	RET

27	**List the 8051 interrupts with its priority (Apr/May 2018)(Nov/Dec 2017)** Types of Interrupts in 8051 Microcontroller The 8051 microcontroller can recognize five different events that cause the main program to interrupt from the normal execution. These five sources of interrupts in 8051are: 1. Timer 0 overflow interrupt- TF0 2. Timer 1 overflow interrupt- TF1 3. External hardware interrupt- INT0 4. External hardware interrupt- INT1 5. Serial communication interrupt- RI/TI

28	**What are the applications of stepper motor?** **Industrial Machines –** Stepper motors are used in automotive gauges and machine tooling automated production equipment's. **Security –** new surveillance products for the security industry. **Medical –** Stepper motors are used inside medical scanners, samplers, and also found inside digital dental photography, fluid pumps, respirators and blood analysis machinery. **Consumer Electronics** Stepper motors in cameras for digital camera focus and zooming
29	**Give two examples of sensors and its uses.(Nov/Dec 2017)** The different types of sensors that can be interfaced with microprocessors are Temperature Sensors, IR Sensors, Ultrasonic Sensors, Touch Sensors, Proximity Sensors, Pressure Sensors, Level Sensors, Smoke and Gas Sensors etc.
30	**How to program 8051 Timers?(Nov/Dec 2018)** The programming of 8051 Timers can be done by using either polling method or by using interrupt. In polling, the microcontroller keeps monitoring the status of Timer flag. While doing so, it does no other operation and consumes all its processing time in checking the Timer flag until it is raised on a rollover. In interrupt method controller responds to only when the Timer flag is raised. The interrupt method prevents the wastage of controller's processing time unlike polling method. Polling is mostly used for time delay generation and interrupt method is more useful when waveforms are to be generated or some action has to be repeated in fixed delays.
31	**What are the types of ADC?(Nov/Dec 2018)** The different types of ADCs available in different speeds, interfaces and accuracy, namely a Flash type ADC, Counter type ADC, sigma-delta ADC and successive approximation ADC.
	PART-B/Unit V
1	Draw the block diagram of Intel 8051 timer/counter and explain its different modes of operations. **(May 2015)(Apr/May 2018)**
2	What are the different timer mode operations of 8051? Explain them in detail.
3	Explain how to interface ADC and DAC with 8051 in detail with neat diagram.**(Nov/Dec 2017)**
4	Compare PIC microcontroller and ARM processor.
5	Explain how to interface external memory devices with 8051.**(Nov/Dec 2018)**
6	With necessary hardware & software details explain how to interface LCD'S with 8051 **(May 2015)**
7	Explain the different modes of operation of serial port in 8051, indicating various registers associated with it./ Illustrate the serial communication of 8051, SCON **(Apr/May 2016)(Nov/Dec 2017)(Nov/Dec 2018)**
8	(i)How do you interface 8051 microcontroller with keyboard? Explain in detail. (ii) How do you interface 8051 microcontroller with ADC? Explain in detail. **(Dec 2013)**
9	(i) Vin=2.25V, Vref=5V, NO. of data lines are 5. Convert the given analog quantity to its equivalent digital output quantity. **(May 2014)** (ii) Explain the different techniques to convert digital quantity to its equivalent analog quantity.
10	Explain in detail the procedure to interface stepper motor with 8051 and write an ALP to run the stepper motor in both forward and reverse direction with delay. **(May 2015)(Apr/May 2018).**
11	Write a program for generation of unipolar square waveform of 1KHZ frequency using Timer 0 of 8051 in mode 0. Consider the system frequency as 12 MHZ. **(Apr/May 2017)(Nov/Dec 2017)**
12	How Microprocessor and Microcontrollers are different from computer based controllers?**(Nov/Dec 2018)**
13	How Microprocessor and Microcontrollers can help to Control a Process or a Machine tool?**(Nov/Dec 2018)**

CS8503/Theory of Computation

UNIT 1
AUTOMATA FUNDAMENTALS

1. State abstract machine

The machine which performs computation is called abstract machines

Ex:

- FA
- Turing Machine

2. State the applications of TOC.

- Compilers
- Robotics
- AI
- Circuit design

3.State the use of kleene closure.

Positive Closure Sum. Positive Closure or Kleene Closure can be described as the set of finite-length strings that can be generated by concatenating arbitrary elements of set of strings allowing the use of the same element multiple times. In case of numbers, in short, it is a possible numbers generated.

4.what is formal proof.

A formal proof or derivation is a finite sequence of sentences (called well-formed formulas in the case of a formal language), each of which is an axiom, an assumption, or follows from the preceding sentences in the sequence by a rule of inference. If the set of assumptions is empty, then the last sentence in a formal proof is called a theorem of the formal system. The notion of theorem is not in general effective, therefore there may be no method by which we can always find a proof of a given sentence or determine that none exists. The concept of natural deduction is a generalization of the concept of proof

5.what is deductive proof.

Deductive reasoning, also deductive logic, logical deduction is the process of reasoning from one or more statements (premises) to reach a logically certain conclusion. Deductive reasoning goes in the same direction as that of the conditionals, and links premises with conclusions.

6.State proof by contradiction .

The statement is of the form 'if H then C', to prove the contradiction by taking the negation of the conclusion.

7.state proof by induction

A proof by induction is just like an ordinary proof in which every step must be justified. However it employs a neat trick which allows you toprove a statement about an arbitrary number n by first proving it is true when n is 1 and then assuming it is true for n=k and showing it is true for n=k+1.

8.State Finite Automata (NOV/DEC 2017)

A finite-state machine (FSM) or finite-state automaton (FSA, plural: *automata*), finite automaton, or simply a state machine, is a mathematical model of computation. It is an abstract machine that can be in exactly one of a finite number of *states* at any given time. The FSM can change from one state to another in response to some external inputs; the change from one state to another is called a *transition*. An FSM is defined by a list of its states, its initial state, and the conditions for each transition. Finite state machines are of two types – deterministic finite state machines and non-deterministic finite state machines. A deterministic finite-state machine can be constructed equivalent to any non-deterministic one.

9. Define transition diagram.

Transition graph can be interpreted as a flowchart for an algorithm recognizing a language. A transition graph consists of three things:

1. A finite set of states, at least one of which is designated the start state and some of which are designated as final states.
2. An alphabet Σ of possible input symbols from which the input strings are formed.
3. A finite set of transitions that show the change of state from the given state on a given input.

10. State NFA (APRIL/MAY 2018)

A nondeterministic finite automaton (NFA), or nondeterministic finite state machine, does not need to obey these restrictions. In particular, every DFA is also an NFA. ... Using the subset construction algorithm, each NFA can be translated to an equivalent DFA, i.e. a DFA recognizing the same formal language.

11.State DFA

In DFA, for each input symbol, one can determine the state to which the machine will move. Hence, it is called Deterministic Automaton. As it has a finite number of states, the machine is called Deterministic Finite Machine or Deterministic Finite Automaton

12.Differentiate between NFA and DFA(NOV /DEC 2018)

1.“DFA” stands for “Deterministic Finite Automata” while “NFA” stands for “Nondeterministic Finite Automata.” 2.Both are transition functions of automata. InDFA the next possible state is distinctly set while in NFA each pair of state and input symbol can have many possible next states

13. Construct a DFA to accept a string containing a zero followed by a one.

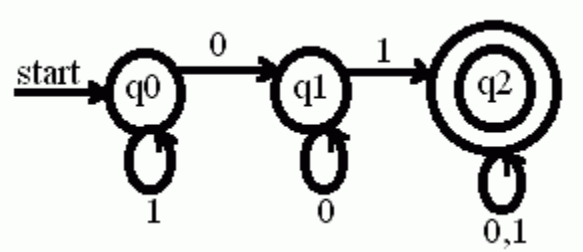

14. Construct a DFA to accept a string containing two consecutive zero’s followed by two consecutive ones.

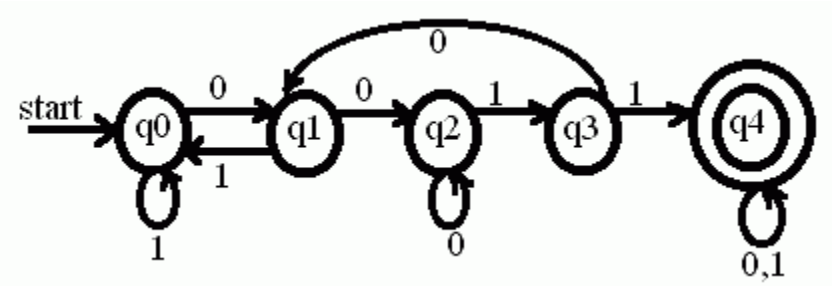

15. Construct a DFA to accept a string containing even number of zeros and any number of ones.

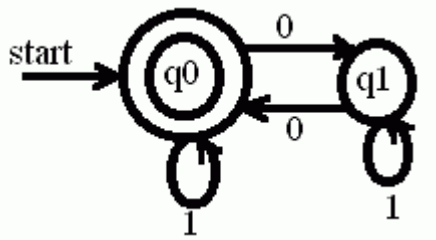

16. Construct a DFA to accept all stings which do not contain three consecutive zeros.

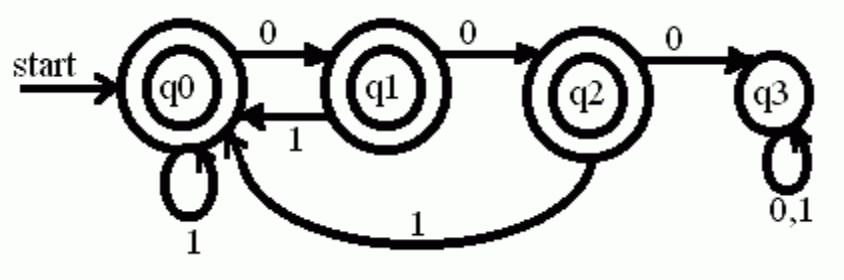

UNIT 2
REGULAR EXPRESSIONS AND LANGUAGES

1. **Write the regular expression for “set of all strings with even length”. (N/D-12, N/D-10)**

   The regular expression for “set of all strings with even length” is R = (11)*.

2. **What is a regular expression? (M/J-13)**

A regular expression is a string that describes the whole set of strings according to certain syntax rules. These expressions are used by many text editors and utilities to search bodies of text for certain patterns etc. Definition: Let Σ be an alphabet.

The regular expression over Σ and the sets they denote are:

- Φ is a r.e and denotes empty set
- ϵ is a r.e and denotes the set { ϵ }
- For each 'a' in Σ, a+ is a r.e and denotes the set {a}
- If 'r' and 's' are r.e denoting the languages R and S respectively the (r+s), (rs) and (r*) are r.e that denote the sets RUS, RS and R* respectively

3. If L = {The language starting and ending with 'a' and having any combinations of 'b' in between}, then what will be the regular expression?

The regular expression is written as r = a b*a.

4. Write the regular expression for the language that accepts all strings in which 'a' appears tripled over the set ∑ = {a}.

The regular expression is written as r = (aaa)*.

5. Write the regular expression for the language in which every string will have at least one 'a' followed by at least one 'b'.

The regular expression for the language in which every string will have at least one 'a' followed by atleast one 'b' is given as: R=a+ b + .

6. Construct a regular expression for the language over the set Σ = {a, b} in which total numbers of 'a' are divisible by 3.

The regular expression is (b* a b* a b* a b*)*.

7. Write the regular expression to denote language L which accepts all the strings that begins or ends with either 00 or 11.

The regular expression consists of two parts: L1 = (00+11) (any no of 0's and 1's) =(00+11)(0+1)* L2 = (any no of 0's and 1's)(00+11) =(0+1)*(00+11) Hence, regular expression R=L1+L2 =[(00+11)(0+1)*] + [(0+1)* (00+11)].

8. Write regular expressions for the following L1 = set of all strings of 0 and 1 ending in 00. L2 = set of all strings of 0 and 1 beginning with 1 and ending with 0. (N/D-12)

The regular expressions are: L1 = (0+1)*0 L2 = 1(0+1)*0

9. What are the applications of regular expressions and finite automata?

Lexical analyzers and Text editors are the two applications.

1. Lexical analyzers The tokens of the programming language can be expressed using regular expressions. The lexical analyzer scans the input program and separates the tokens. For example, identifier can be expressed as a regular expression as: (letter) (letter + digit)*. If anything in the source language matches with this regular expression then it is recognized as an identifier. The letter is {A, B, C,…Z, a, b, c, … z} and digit is {0,1,…9}.Thus regular expression identifies token in a language.
2. Text editors These are programs used for processing the text. For example, a UNIX text editor uses the regular expression for substituting the strings such as: S/bbb*/b/. It substitutes a single blank for the first string of two or more blanks in a given line. In UNIX text editors any regular expression is converted to an NFA with Є transitions, this NFA can be then simulated directly.

10. List out the methods that are used for converting DFA to RE.

The three methods are:

1. Regular Expression Equation Method
2. Arden's Theorem
3. State Elimination Technique

12. State Arden's theorem.

Arden's theorem helps in checking the equivalence of two regular expressions. Let P and Q be the two regular expressions over the input alphabet Σ. The regular expression R is given as: R=Q+RP which has a unique solution as R=QP*.

13. What is dead state?

All the non final states which transmit to itself for all input symbols in Σ are called dead state.

14. Let R be any set of regular languages. Is UR regular? Prove it.

Yes, UR is regular. Let P, Q be any two regular languages. As per theorem L(R) = L (P UQ) = L (P+Q) Since '+' is a operator for regular expressions L(R) is also regular.

15. List the closure properties of regular language. (A/M-10, A/M-11, M/J-13)

The regular languages are closed under the following properties: 1. Union 2. Intersection 3. Complement 4. Difference 5. Reversal 6. Closure 7. Concatenation 8. Homomorphism 9. Inverse Homomorphism

16. Prove that (0 * 1*) * = (0 + 1)*.

LHS: (0*1*)* = { ε, 0,1, 00, 11, 0011, 011, 0011110…} RHS: (0+1)* = { ε, 0,1,00,11,0011,011,0011110…} Hence LHS = RHS is proved

17. Prove that (r*) * = r * for a regular expression r.

Solution: (r*) * == {ε, r, rr, …} = r*

18. Differentiate L* from L + .

L* denotes Kleene closure and is given by L* = i=0 Example: 0* ={ ε, 0, 00, 000,…} Language also includes the empty words. ∞ L i L + denotes Positive closure and is given by L+ = i=1 Example: 0+ = {0, 00, 000,…}

19. What is the closure property of regular set?

The regular sets are closed under union, concatenation and Kleene closure. r1Ur2= r1 +r2 r1.r2= r1r2 (r)*=r* The class of regular sets is closed under complementation, substitution, homomorphism and inverse homomorphism.

20. Write a short note on minimization of DFA.

Minimization of DFA reduces the number of states from given FA. First find out which two states are equivalent and then those two states are to be replaced by one representative state. For finding the equivalent states, the rule applied is that "The two states S1 & S2 are equivalent if and only if both the states are final or non-final states".

UNIT 3
CONTEXT FREE GRAMMAR AND LANGUAGES

1. What are the applications of Context free languages?

- Context free languages are used in:
- Defining programming languages.
- Formalizing the notion of parsing.
- Translation of programming languages.
- String processing applications.

2. What are the uses of Context free grammars?

- Construction of compilers.
- Simplified the definition of programming languages.
- Describes the arithmetic expressions with arbitrary nesting of balanced parenthesis { (,) }.
- Describes block structure in programming languages. Model neural nets.

3.Define a context free grammar

A context free grammar (CFG) is denoted as G=(V,T,P,S) where V and T are finite set of variables and terminals respectively. V and T are disjoint. P is a finite set ofproductions each is of the form A->α where A is a variable and α is a string of symbols from (V U T)*.

4.What is the language generated by CFG or G?

The language generated by G (L(G)) is {w | w is in T* and S =>w .That is a G string is in L(G) if:

- The string consists solely of terminals.
- The string can be derived from S.

5.What is : (a) CFL (b) Sentential form

L is a context free language (CFL) if it is L(G) for some CFG G.

A string of terminals and variables α is called a sentential form if:

S => α ,where S is the start symbol of the grammar.

6. What is :(a) derivation (b)derivation/parse tree (c) subtree

(a) Let G=(V,T,P,S) be the context free grammar. If A->β is a production of P and

α and γ are any strings in (VUT)* then α A γ => αβγ. G

(b) A tree is a parse \ derivation tree for G if:

- Every vertex has a label which is a symbol of VU TU{Є}.
- The label of the root is S.
- If a vertex is interior and has a label A, then A must be in V.
- If n has a label A and vertices n1,n2,….. nk are the sons of the vertex n in order from leftwith labels X1,X2,……..Xk respectively then A→ X1X2…..Xk must be in P. (v) If vertex n has label Є ,then n is a leaf and is the only son of its father.

(c) A subtree of a derivation tree is a particular vertex of the tree together with all its descendants ,the edges connecting them and their labels.The label of the root may not be the start symbol of the grammar.

7. If S->aSb | aAb , A->bAa , A->ba .Find out the CFL

soln. S->aAb=>abab

S->aSb=>a aAb b =>a a ba b b(sub S->aAb) S->aSb =>a aSb b =>a a aAb b b=>a a a ba b bb

Thus L={anbmambn, where n,m>=1}

8. What is a ambiguous grammar?(APRIL/MAY 2018)

A grammar is said to be ambiguous if it has more than one derivation trees for a sentence or in other words if it has more than one leftmost derivation or more than one rightmost derivation.

9.Consider the grammarP={S->aS | aSbS | Є } is ambiguous by constructing: (a) two parse trees (b) two leftmost derivation (c) rightmost derivation

(a)

Consider a string aab :

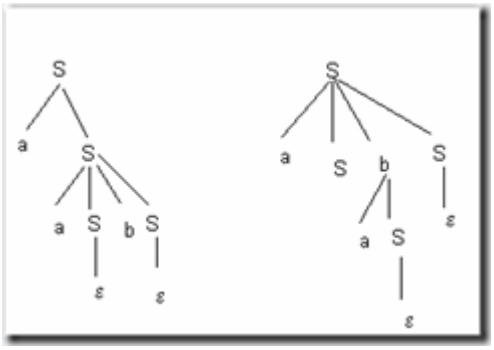

(b) (i)S=>aS (ii) S=>aSbS

=>aaSbS =>aaSbS

=>aabS =>aabS

=>aab =>aab

(c)(i)S=>aS (ii) S=>aSbS

=>aaSbS =>aSb

=>aaSb =>aaSbS

=>aab =>aaSb

=>aab

10. Find CFG with no useless symbols equivalent to : S→AB | CA , B→BC | AB, A→a , C→aB | b.

S-> AB S->CA B->BC B->AB A->a

C->aB

C->b are the given productions.

A symbol X is useful if S => αXβ => w

The variable B cannot generate terminals as B->BC and B->AB. Hence B is useless symbol and remove B from all productions.

Hence useful productions are: S->CA , A->a , C->b

11. What are the three ways to simplify a context free grammar?

- By removing the useless symbols from the set of productions.
- By eliminating the empty productions.
- By eliminating the unit productions.

12. What are the properties of the CFL generated by a CFG?

- Each variable and each terminal of G appears in the derivation of some word in L

- There are no productions of the form A->B where A and B are variables.

14. Find the grammar for the language L={a2n bc ,where n>1 }

let G=({S,A,B}, {a,b,c} ,P , {S}) where P: S->Abc
A->aaA | Є

15.Find the language generated by :S->0S1 | 0A | 0 |1B | 1

A->0A | 0 , B->1B | 1
The minimum string is S-> 0 | 1
S->0S1=>001
S->0S1=>011
S->0S1=>00S11=>000S111=>0000A111=>00000111
Thus L={ 0n 1 m | m not equal to n, and n,m >=1}

16.Construct the grammar for the language L={ an b an | n>=1}.

The grammar has the production P as: S->aAa
A->aAa | b
The grammar is thus : G=({S,A} ,{a,b} ,P,S)

17. Construct a grammar for the language L which has all the strings which are all palindrome over Σ={a, b}.

G=({S}, {a,b} , P, S) P:{ S -> aSa ,
S-> b S b, S-> a,
S->b,
S->Є } which is in palindrome.

18. Derive the string 'aababa ' for the following CFG (NOV/DEC 2017)

S->aSX/b
X->Xb/a
Solution:
S=>aSX
=>aSa
=>aaSXa
=>aabXa
=>aabXba
=>aababa

19. Differentiate sentences Vs sentential forms

- A sentence is a string of terminal symbols.
- A sentential form is a string containing a mix of variables and terminal symbols or all variables.This is an intermediate form in doing a derivation.

20. What is a formal language?

Language is a set of valid strings from some alphabet. The set may be empty,finite or infinite. L(M) is the language defined by machine M and L(G) is the language defined by Context free grammar. The two notations for specifying formal languages are:Grammar or regular expression(Generative approach) Automaton(Recognition approach)

21.What is Backus-Naur Form(BNF)?

Computer scientists describes the programming languages by a notation called Backus- Naur Form. This is a context free grammar notation with minor changes in format and some shorthand.

22. Let G= ({S,C} ,{a,b},P,S) where P consists of S->aCa , C->aCa |b. Find L(G).

S-> aCa => aba
S->aCa=> a aCa a=>aabaa
S->aCa=> a aCa a=> a a aCa a a =>aaabaaa
Thus L(G)= { anban ,where n>=1 }

23.Define Pushdown Automata.

A pushdown Automata M is a system (Q, Σ, Γ ,δ ,q0, Z0,F) where

- Q is a finite set of states.
- Σ is an alphabet called the input alphabet.
- Γ is an alphabet called stack alphabet. q0 in Q is called initial state.
- Zo in Γ is start symbol in stack. F is the set of final states.
- δ is a mapping from Q X (Σ U {Є}) X Γ to finite subsets of Q X Γ *.

24.Compare NFA and PDA.

NFA	PDA
1.The language accepted by NFA is the regular language.	The language accepted by PDA is Context free language.
2.NFA has no memory.	PDA is essentially an NFA with a stack(memory).
3. It can store only limited amount of information.	It stores unbounded limit of information.
4.A language/string is accepted only by reaching the final state.	It accepts a language either by empty Stack or by reaching a final state.

25.Is it true that the language accepted by a PDA by empty stack and final states are different languages.

No, because the languages accepted by PDA ‘s by final state are exactly the languages accepted by PDA’s by empty stack.

26. Define Deterministic PDA.

A PDA M =(Q, Σ ,Γ ,δ ,q0 ,Z0 ,F) is deterministic if:
For each q in Q and Z in Γ , whenever δ(q,Є,Z) is nonempty ,then
δ(q,a,Z) is empty for all a in Σ.
For no q in Q , Z in Γ , and a in Σ U { Є} does δ(q,a,Z) contains more than one element.
(Eg): The PDA accepting {wcwR | w in (0+1) * }.

UNIT 4
PROPERTIES OF CONTEXT FREE LANGUAGES

1. State the equivalence of PDA and CFL.

- If L is a context free language, then there exists a PDA M such thatL=N(M).
- If L is N(M) for some PDA m, then L is a context free language.

2. What are the closure properties of CFL?(NOV/DEC 2017)

- CFL are closed under union, concatenation and Kleene closure. CFL are closed under substitution , homomorphism.
- CFL are not closed under intersection , complementation.
- Closure properties of CFL’s are used to prove that certain languages are not context free.

3. State the pumping lemma for CFLs.

Let L be any CFL. Then there is a constant n, depending only on L, such that if z is in L and |z| >=n, then z=uvwxy such that :

- |vx| >=1
- |vwx| <=n and
- for all i>=0 uviwxiy is in L.

4. What is the main application of pumping lemma in CFLs?

The pumping lemma can be used to prove a variety of languages are not context free . Some examples are:

- L1 ={ aibici | i>=1} is not a CFL.
- L2= { aibjcidj | i>=1 and J>=1 } is not a CFL.

5. Give an example of Deterministic CFL.

The language L={anbn : n>=0} is a deterministic CFL

6. Compare NPDA and DPDA.

NPDA	DPDA
1. NPDA is the standard PDA used in automata theory.	1. The standard PDA in practical situation is DPDA.
2. Every PDA is NPDA unless otherwise	2. The PDA is deterministic in the sense ,that at

specified.

most one
move is possible from any ID.

7. Give an example of NonDeterministic CFL

The language L={ wwR : w Є {a,b} + } is a nondeterministic CFL.

8.What is a turing machine?

Turing machine is a simple mathematical model of a computer. TM has unlimited and unrestricted memory and is a much more accurate model of a general purposecomputer. The turing machine is a FA with a R/W Head. It has an infinite tape divided into cells ,each cell holding one symbol.

9.What are the special features of TM?

In one move ,TM depending upon the symbol scanned by the tape head and state of the finite control:Changes state Prints a symbol on the tape cell scanned, replacing what was written there. Moves the R/w head left or right one cell.

10. Define Turing machine.(NOV/DEC 2017)(APRIL/MAY 2018)

A Turing machine is denoted as M=(Q, Σ, Γ ,δ ,q0, B,F) Q is a finite set of states.

- Σ is set of i/p symbols ,not including B.
- Γ is the finite set of tape symbols. q0 in Q is called start state.
- B in Γ is blank symbol.
- F is the set of final states.
- δ is a mapping from Q X Γ to Q X Γ X {L,R}.

11.Define Instantaneous description of TM.

The ID of a TM M is denoted as α1q α2 . Here q is the current state of M is in Q;α1 α2 is the string in Γ * that is the contents of the tape up to the rightmost nonblank symbol or the symbol to the left of the head, whichever is the rightmost.

12. What are the applications of TM?

TM can be used as:

- Recognizers of languages.
- Computers of functions on non negative integers. Generating devices.

13.What is the basic difference between 2-way FA and TM?

Turing machine can change symbols on its tape , whereas the FA cannot change symbols on tape. Also TM has a tape head that moves both left and right side ,whereas
the FA doesn't have such a tape head.

14.Define a move in TM.

Let X1 X2…X i-1 q Xi…Xn be an ID.
The left move is: if δ (q, Xi)= (p, Y,L) ,if i>1 then
X1 X2…X i-1 q Xi…Xn |---- X1X2… X i-2 p X i-1 Y X i+1…Xn.
M
The right move is if δ (q, Xi)= (p, Y,R) ,if i>1 then
X1 X2…X i-1 q Xi…Xn |---- X1X2… X i-1Y p X i+1…Xn.
M

15. What is the language accepted by TM?

The language accepted by M is L(M) , is the set of words in Σ * that cause M to enter a final state when placed ,justified at the left on the tape of M, with M at qo and the tape head of M at the leftmost cell. The language accepted by M is: { w | w in Σ * and q0w |--- α1 p α2 for some p in F and α1 ,α2 in Γ * }.

16. What is a multi-tape Turing machine?(NOV/DEC 2018)

A multi-tape Turing machine consists of a finite control with k-tape heads and k- tapes ; each tape is infinite in both directions. On a single move depending on the state of finite control and symbol scanned by each of tape heads ,the machine can change state print a new symbol on each cells scanned by tape head, move each of its tape head independently one cell to the left or right or remain stationary.

17.What is a multidimensional TM?

The device has a finite control , but the tape consists of a k-dimensional array of cells infinite in all 2k directions, for some fixed k. Depending on the state andsymbol scanned , the device changes state , prints a new symbol and moves its tape- head in one of the 2k directions, either positively or negatively ,along one of the k-axes.

18. State pumping lemma for RL. (NOV/DEC 2017)(NOV/DEC 2018)

Every regular language can be accepted by a finite automaton, a recognizing device with a finite set of states and no auxiliary memory. This finiteness of the set is used by the pumping lemma in proving that a language is not regular. It is important to note that pumping lemma is not used for proving whether a language is regular. It is rather used for proving if the language is not regular.

UNIT V
UNDECIDABILITY

1.When we say a problem is decidable? Give an example of undecidable problem?

A problem whose language is recursive is said to be decidable. Otherwise the problem is said to be undecidable. Decidable problems have an algorithm that takes as input an instance of the problem and determines whether the answer to that instance is "yes" or "no".
(eg) of undecidable problems are (1)Halting problem of the TM.

2.Give examples of decidable problems.

- Given a DFSM M and string w, does M accept w?
- Given a DFSM M is L(M) = Φ ?
- Given two DFSMs M1 and M2 is L(M1)= L(M2) ?
- Given a regular expression α and a string w ,does α generate w?
- Given a NFSM M and string w ,does M accept w?

3. Give examples of recursive languages?

- The language L defined as L= { "M" ,"w" : M is a DFSM that accepts w} is recursive.
- L defined as { "M1" U "M2" : DFSMs M1 and M2 and L(M1)=L(M2) } is recursive.

4. Differentiate recursive and recursively enumerable languages.

Recursive languages	Recursively enumerable languages
1. A language is said to be recursive if and only if there exists a membership algorithm for it.	1. A language is said to be r.e if there exists a TM that accepts it.
2. A language L is recursive iff there is a TM that decides L. (Turing decidable languages). TMs that decide languages are algorithms.	2. L is recursively enumerable iff there is a TM that semi-decides L. (Turing acceptable languages). TMs that semi-decides languages are not algorithms.

5. What properties of recursive enumerable seta are not decidable?(NOV/DEC 2017)

- Emptiness
- Finiteness
- Regularity
- Context-freedom.

6.Define Lℓ .When is ℓ a trivial property?

Lℓ is defined as the set { <M> | L(M) is in ℓ. }
ℓ is a trivial property if ℓ is empty or it consists of all r.e languages.

7. What properties of r.e sets are not r.e?

- L = Φ
- L = Σ *.
- L is recursive
- L is not recursive. L is singleton.
- L is a regular set. L - Lu ≠ Φ

8. Show that AMBIGUITY problem is un-decidable.

- Consider the ambiguity problem for CFGs. Use the "yes-no" version of AMB.
- An algorithm for FIND is used to solve AMB. FIND requires producing a word with two or more parses if one exists and answers "no" otherwise. By the reduction of
- AMB to FIND we conclude there is no algorithm for FIND and hence no algorithm for AMB.

9.State the halting problem of TMs.

- The halting problem for TMs is:
- Given any TM M and an input string w, does M halt on w?
- This problem is undecidable as there is no algorithm to solve this problem.

10.Define PCP or Post Correspondence Problem.

An instance of PCP consists of two lists , A = w1,w2,….wkand B = x1,…..xk of strings over some alphabet Σ .This instance of PCP has a solution if there is any sequence of integers i1,i2,..im with m >=1 such that wi1, wi2,…wim = xi1,xi2 ,…ximThe sequence i1 ,i2 ,…im is a solution to this instance of PCP.

10.Define MPCP or Modified PCP.

The MPCP is : Given lists A and B of K strings from Σ * ,say
A = w1 ,w2, …wk and B= x1, x2,…..xk
does there exists a sequence of integers i1,i2,…ir such that w1wi1wi2…..wir = x1xi1xi2…xir?

11. What is the difference between PCP and MPCP?

The difference between MPCP and PCP is that in the MPCP ,a solution is required to start with the first string on each list.

12.What are(a) recursively enumerable languages(APRIL/MAY 2018) (b) recursive sets?

The languages that is accepted by TM is said to be recursively enumerable (r. e)languages. Enumerable means that the strings in the language can be enumerated bythe TM. The class of r. e languages include CFL's.The recursive sets include languages accepted by at least one TM that halts on all inputs.

13. When a recursively enumerable language is said to be recursive ? Is it true that the language accepted by a non-deterministic Turing machine is different from recursively enumerable language?

A language L is recursively enumerable if there is a TM that accepts L and recursive if there is a TM that recognizes L. Thus r.e language is Turing acceptable andrecursive language is Turing decidable languages.No , the language accepted by non-deterministic Turing machine is same as recursively enumerable language.

16MARKS (UNIT 1-5)
UNIT-I AUTOMATA FUNDAMENTALS

1. a) If L is accepted by an NFA with ε-transition then show that L is accepted by an NFA without ε-transition. (8)

b) Construct a DFA equivalent to the NFA.

M=({p,q,r},{0,1}, δ,p,{q,s}) Where δ is defined in the following table. (8)

δ	0	1
p	{q,s}	{q}
q	{r}	{q,r}
r	{s}	{p}
s	-	{p}

2. a)Construct a DFA equivalent to the NFA given below. (10)

	0	1
p	{p,q}	p
q	r	r
r	s	-
s	s	s

b) Let L be a set accepted by a NFA then show that there exists a DFA that accepts L.(6)

3) Define NFA . with ε-transition. Prove that if L is accepted by an NFA with ε-transition then L is also accepted by a NFA without -transition. (16)

4 a) Illustrate the concept of NFA and DFA and construct a NDFA accepting all string in $\{a,b\}^+$ with either two consecutive a's or two consecutive b's. Give the DFA accepting the following language:set of all strings beginning with that when interpretedas a binary integer is a multiple of 5.
(10)

b) Draw the NFA to accept the following languages. (6)

(i) Set of Strings over alphabet {0,1,…….9} such that the final digit has appeared before. (8)

(ii) Set of strings of 0's and 1's such that there are two 0's separated by a number of positions that is a multiple of 4.

5a) Let L be a set accepted by an NFA.Then prove that there exists a deterministic finite automaton that accepts L.Is the converse true? Justify your answer. (10)

b) Construct DFA equivalent to the NFA given below: (6)

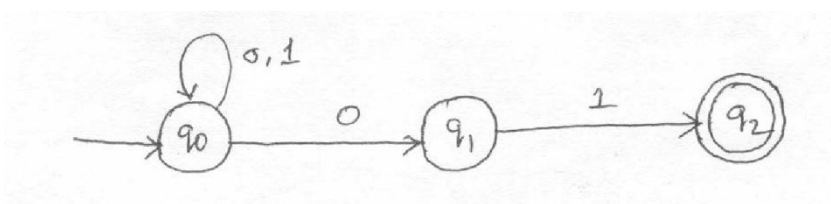

6) Consider the following ε–NFA.Compute the ε–closure of each state and find it's equivalent DFA. (16)

	ε	A	b	C
p	{q}	{p}	Φ	Φ
q	{r}	ϕ	{q}	Φ
*r	Φ	ϕ	ϕ	{r}

7) Convert the following NFA to its equivalent DFA (16)

	0	1
p	{p,q}	{p}
q	{r}	{r}
R	{s}	Φ
*s	{s}	{s}

8) Change the given NFA to DFA

$M=(\{q_0,q_1\},\{0,1\},\delta,q_0,\{q_1\})$ where δ is given by

$\delta(q_0,0)=\{q_0,q_1\},\delta(q_0,1)=\{q_1\},\delta(q_1,0)=\Phi,\delta(q_1,1)=\{q_0,q_1\}$ (16)

9) Change the ε NFA to NFA (16)

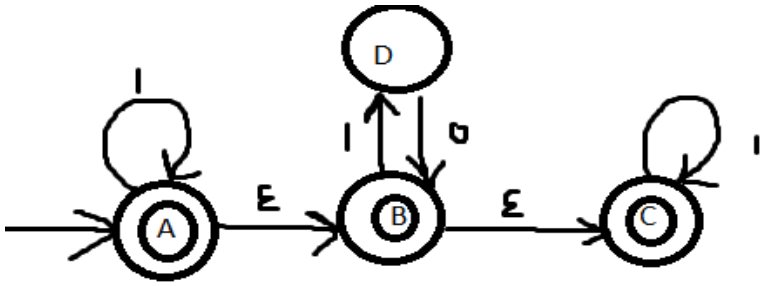

10) Change the ε NFA to DFA (16)

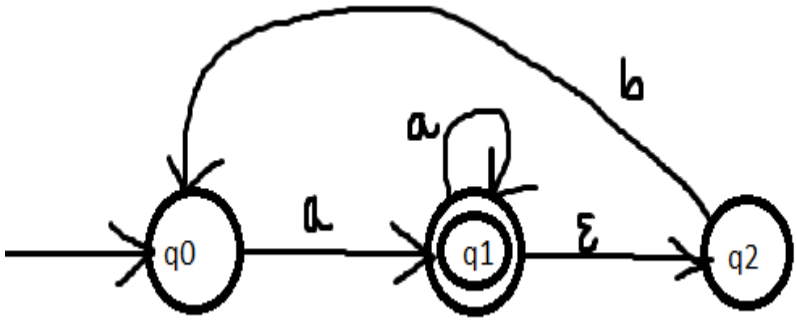

11) Examine the DFA from the given NFA $M=(\{q_0,q_1\},\{a,b\},\delta,q_0,\{q_1\})$ with the state table diagramfor δ is given as below (16)

δ(states)	a	B
q_0	$\{q_0,q_1\}$	$\{q_1\}$
q_1	Φ	$\{q_0,q_1\}$

12) Change the ε NFA to NFA and then convert the NFA to DFA (16)

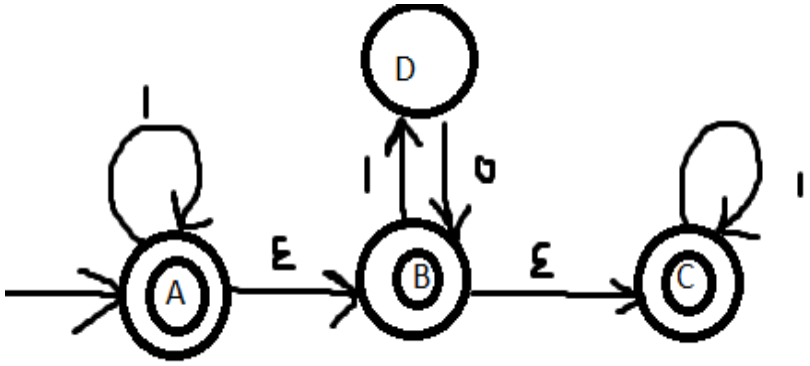

UNIT-II REGULAR EXPRESSIONS AND LANGUAGE

1.a)Construct an NFA equivalent to (0+1)*(00+11) (8)

b)Show that the set $L=\{a^n\ b^n/n>=1\}$ is not a regular (8)

2 a)Check whether the language $L=(0^n\ 1^n\ /n>=1)$ is regular or not? Justify your answer. (8)

b)Construct a Regular expression corresponding to the state diagram given in the following figure.

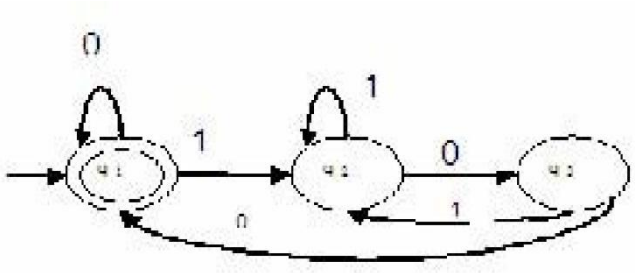

(8)

3.a)Construct an NFA equivalent to the regular expression (0+1)*(00+11)(0+1)*. (8)

b)Define RE. Obtain the regular expression that denotes the language accepted by the following DFA. (8)

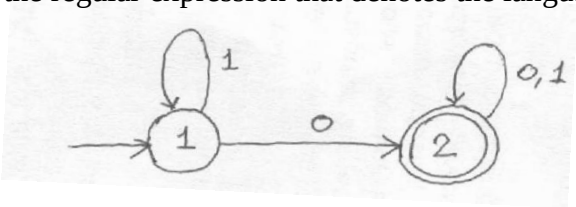

4.a)Construct an NFA equivalent to the regular expression ((0+1)(0+1)(0+1))* (8)

b)Construct an NFA equivalent to 10+(0+11)0*1 (8)

5.a)Obtain the regular expression denoting the language accepted by the following DFA (8)

b)Obtain the regular expression denoting the language accepted by the following DFA by using the formula Rij^k (8)

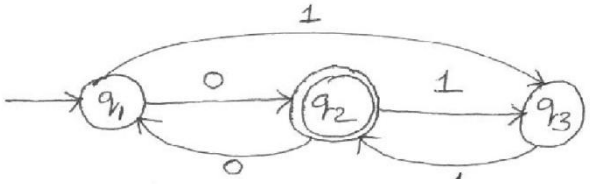

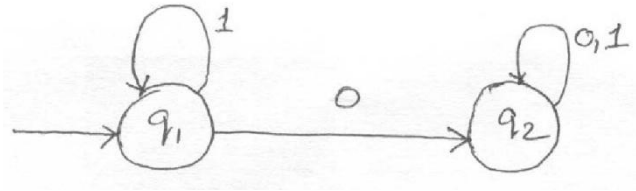

6. a)Show that every set accepted by a DFA is denoted by a regular Expression(8)

b)Construct an NFA equivalent to the following regular expression01*+1. (8)

7. a)Definea Regular set using pumping Lemma. showthat the language $L=\{0i^2$ / i is an integer,i>=1} is not regular (8)

b)Construct an NFA equivalent to the regular expression 10+(0+11)0*1 (8)

8. a) Show that the set $L=\{O^{n2/n}$ is an integer,n>=1} is not regular. (6)

b)Construct an NFA equivalent to the following regular expression $((10)+(0+1)^*\ 01$. (10)

9.a)Prove that if L=L(A) for some DFA A,then there is a regular expression R such that L=L(R). (8)

b) Show that the language $\{0^p, p \text{ is prime}\}$ is not regular. (8)

10.Find whether the following languages are regular or not.

(i) $L=\{w \varepsilon \{a,b\} | w=w^R\}$.

(ii) $L=\{0^n 1^m 2^{n+m}, n,m>=1\}$

(iii) $L=\{1^k | k=n^2, n>=1\}$. (4)

(iv) L1/L2={x | for some y εL2,xy εL1},where L1 and L2 are any two languages and L1/L2 is the quotient of L1 and L2. (16)

11.a) Find the regular expression for the set of all strings denoted by R213 from the deterministic finite automata given below: . (8)

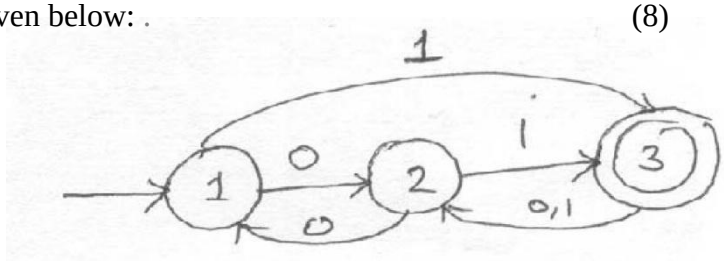

b)Verify whether the finite automata M1 and M2 given below are equivalent over {a,b}.(8)

12.Construct transition diagram of a finite automaton corresponding to the regular expression $(ab+c^*)^*b$. (16)

13.a)Find the regular expression corresponding to the finite automaton given below.(8)

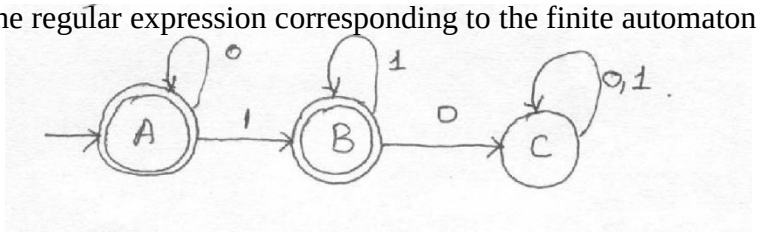

b)Find the regular expression for the set of all strings denoted by $R^2 23$ from the deterministic finite automata given below.(8)

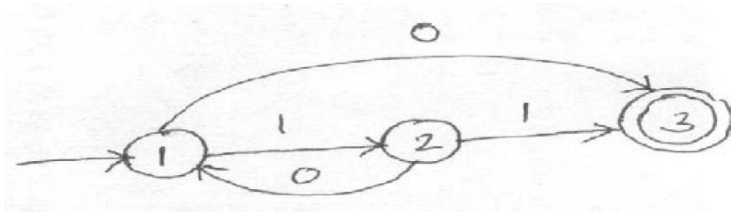

14.a) Find whether the languages {ww,w is in (1+0)*} and $\{1^k \mid k=n^2, n>=1\}$ are regular or not. (8)

b) Show that the regular languages are closed under intersection and reversal. (8)

15 Construct the minimization of DFA equivalent to the DFA (16)

States	0	1
->q0	q1	q5
q1	q6	q2
*q2	q0	q2
q3	q2	q6
q4	q1	q5
q5	q2	q6
q6	q6	q4
q7	q6	q2

UNIT-III CONTEXT FREE GRAMMARS AND LANGUAGES

1. a) Let G be a CFG and let a=>w in G. Then show that there is a leftmost derivation of w.(8)

   b) Let G=(V,T,P,S) be a Context free Grammar then prove that if S=> α then there is a derivation tree in G with yield α.(8)

2. Let G be a grammar s->OB/1A, A->O/OS/1AA, B->1/1S/OBB. For the string 00110101 find its leftmost derivation and derivation tree.(16)

3. a) If G is the grammar S->Sbs/a, Show that G is ambiguous.(8)

   b) Give a detailed description of ambiguity in Context free grammar(8)

4. a) Show that E->E+E/E*E/(E)/id is ambiguous. (6)

   b)Construct a Context free grammar G which accepts N(M), where M=({q0, q1},{a,b}, {z0,z},δ,q0,z0,Φ) and where δis given by

   δ(q0,b,z0)={(q0,zz0)}

   δ(q0, ε,z0)={(q0, ε)}

   δ(q0,b,z)={(q0,zz)}

   δ(q0,a,z)={(q1,z)}

   δ(q1,b,z)={(q1, ε)}

   δ(q1,a,z0)={(q0,z0)} (10)

5. a)If L is Context free language then prove that there exists PDA M such that L=N(M). (8)

b)Explain different types of acceptance of a PDA.Are they equivalent in sense of language acceptance? Justify your answer. (8)

6. Construct a PDA accepting $\{a^n b^m a^n / m,n>=1\}$ by empty stack. Also construct the corresponding context-free grammar accepting the same set. (16)

7. a) Prove that L is L(M2) for some PDA M2 if and only if L is N(M1) for some PDA M1. (8)

b)Define deterministic Push Down Automata DPDA. Is it true that DPDA and PDA are equivalent in the sense of language acceptance is concern? Justify Your answer.(8)

8. a) Construct a equivalent grammar G in CNF for the grammar G1 where G1 =({S,A,B},{a,b},{S->bA/aB,A->bAA/aS/a, B->aBB/bS/b},S) (8)

b)Find the left most and right most derivation corresponding to the tree. (8)

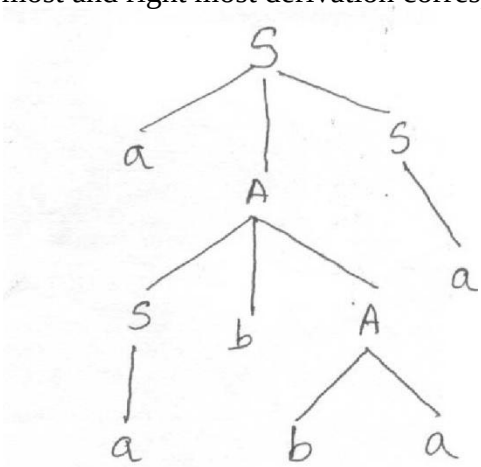

9 a) Find the language generated by a grammar G=({S},{a,b},{S->aSb, S->ab},S) (4)

b) Given G=({S,A},{a,b},P,S) where P={S->AaS|S|SS,A->SbA|ba} S-Start symbol. Find the left most and right most derivation of the string w=aabbaaa. Also construct the derivation tree for the string w. (4)

c) Define a PDA. Give an Example for a language accepted byPDA by empty stack. G denotes the context-free grammar defined by the following rules. (8)

S->ASB/ab/SS A->aA/A ,B->bB/A

(i)Give a left most derivation of aaabb in G. Draw the associated parse tree.

(ii)Givearight mostderivationofaaabb inG. Draw the associated parse tree.

(iii)Show that G is ambiguous. Explain with steps.

(iv)Construct an unambiguous grammar equivalent to G. Explain.

11a) Construct the grammar for the following PDA.

M=({q0, q1},{0,1},{X,z0},δ,q0,Z0,Φ) and where δis given by

δ(q0,0,z0)={(q0,XZ0)}, δ(q0,0,X)={(q0,XX)},δ(q0,1,X)={(q1, ε)},

δ(q1,1,X)={(q1, ε)},δ(q1, ε,X)={(q1, ε)}, δ(q1, ε, Z0)={(q1, ε)}. (12)

b) Prove that if L is N(M1) for some PDA M1 then L is L(M2) for somePDA M2.(4)

9. a) Construct a PDA that recognizes the language $\{a^i b^j c^k | i,j,k>0$ and $i=j$ or $i=k\}$.(8)

   b) Discuss about PDA acceptance (8)

      a) From empty Stack to final state.

      b) From Final state to Empty Stack.

UNIT-IV PROPERTIES OF CONTEXT FREE LANGUAGES

1.a)Find a grammar in Chomsky Normal form equivalent to S->aAD;A.->aB/bAB; B->b, D->d. (6)

b)Convert to Greibach Normal Form the grammar G=({A1, A2, A3},{a,b},P,A1) where P consists of the following.

A1 ->A2 . A3, A2 ->A3 A1 /b,A3 ->A1 A2 /a. (10)

2.a)Show that the language $\{0^n1^n2^2/n>=1\}$ is not a Context free language. (6) b)Convert the grammar S->AB, A->BS/b, B->SA/a into Greibach NormalForm. (10)

3.a)Construct a equivalent grammar G in CNF for the grammar G1 where

G1 ={{S,A,B},{a,b},{S->bA/aB,A->bAA/aS/a, B->aBB/bS/b},S) (12)

b)Obtain the Chomsky Normal Form equivalent to the grammar

S->bA/aB, A->bAA/aS/a, B->aBB/bS/b. (4)

4.a)Begin with the grammar

S->0A0/1B1/BBA->CB->S/AC->S/ ε

and simplify using the safe order Eliminate ε-Productions Eliminate unit production Eliminate useless symbols Put the (resultant) grammar in Chomsky Normal Form. (10)

b)Let G=(V,T,P,S) be a CFG. Show that if S=α, then there is a derivation tree in a grammar G with yield α. (6)

5.a)Let G be the grammar S->aS/aSbS/ ε. Prove that L(G)={x/each prefix of x has atleast as many a's as b's} (6)

b)Explain the..Construction of an equivalent grammarin CNF for the grammar

G=({S,A,B}{a,b},P,S)

where P={S->bA|aB, A->bAA|aS|a, B->aBB|bS|b} (10)

6.a)Find a Context free grammar with no useless symbol equivalent to

S->AB/CA, B->BC/ABA->a, C->aB/b. (6)

b)Show that any CFL without εcan be generated by an equivalent grammar in Chomsky Normal Form. (10)

7.a)Convert the following CFG to CNF S->ASA|aB A->B|S B->b| ε(12) b)Explain about Greibach Normal Form. (4)

8.a)Is L={a^n b^n c^n /n>=1} a context free language? Justify Your answer. (8)

b)Prove that for every context free language L without εthere exists an equivalent grammar in Greibach Normal Form. (8)

9.State and Prove pumping lemma for Context free languages. (16)

10.a)State Pumping Lemma for context free language. Show that (0n 1n 2^n/n>=1} is not a Context free language. (6)

b)State Pumping lemma for context free language σ show that language

{a^i b^j c^i d^j/i>=1, and j>=1} is not context-free. (6)

11.a)Design a Turing Machine M to implement the function "multiplication" using the subroutine 'copy'. (12)

b)Explain how a Turing Machine with the multiple tracks of the tape can be used to determine the given number is prime or not. (4)

12.a)Design a Turing Machine to compute f(m+n)=m+n, V m,n>=0 and simulate their action on the input 0100. (10)

b)Describe the following Turing machine and their working. Are they more powerful than the Basic Turing Machine? Multi-tape Turing Machine Multi-Dimensional Turing Machine
Non-Deterministic Turing Machine. (6)

13.a) Define Turing machine for computing f(m,n)=m-n (proper subtraction).

b)Explain how the multiple tracks in a Turing Machine can be used for testing given positive integer is a prime or not. (6)

14.a)Explain in detail:"The Turing Machine as a Computer of integer functions". (8) b)Design a Turing Machine to accept the language L={0^n 1^n/n>=1} (8)

15. a)What is the role of checking off symbols in a Turing Machine? (4)

b)Construct a Turing Machine that recognizes the language {wcw/w in {a+b}+ } (12)

16.Prove that the language L is recognized by a Turing Machine with a two way infinite tape if and only if it is recognized by a Turing Machine with a one way infinite tape. (16)

17.For each of the following Context free languages L, find the smallest pumping length that will satisfy the statement of the Context free pumping lemma. In each case, Your answer should include a number(the minimum pumping length), a detailed explanation of why that the number is indeed a valid pumping length for the given language L, and a detailed explanation of why no smaller number qualifies as a valid pumping length for that particular language L.

1. L={a^n b^n|n>=0} (6)
2. L={w in {a,b}*|w has the same number of a's and b's} (6) (iii)L={w com in {a,b}*| w has twice as many a's as b's.} (4)

18.a)Give a High level implementation description with a neat sketch of a Turing Machine M that performs the following computation.M=on input w: writes a copy of w on the tape immediately after w,leaving the string w#w on the tape.Assume . that the input string initially appears at the left most end of the tape and that the input alphabet does not contain the blank character' : The end of the input string is therefore determined by the location of the first blank cell on the input tape. The symbol # is assumed to be in the tape alphabet,and the input alphabet is {a,b}.

(16)

19. a)Show that the language{0^n 1^n 2^n/n>=1}is not context free. (8)

b)Show that the context free languages are closed under union operation but not under intersection. (8)

UNIT-V UNDECIDABILITY

1.a)Show that union of recursive languages is recursive. (4)

b)Define the language Ld and show that Ld is not recursively enumerable language. (8)

c)Explain the Halting problem. Is it decidable or undecidable problem (4)

2.Define Universal language Lu.Show that Lu is recursively enumerable but not recursive.

3.a)Obtainthecode fortheTMM=({q1,q2,q3},{0,1},{0,1,B}, δ,q1,B,{q2}) With the moves δ(q1,1)=(q3,0,R) δ(q3,0)=(q1,1,R) δ(q3,1)=(q2,0,R) δ(q3,B)=(q3,1,L) δ(q3,B)=(q3,1,L)

b)Show that Ln is recursively enumerable.

4.a)Define Ld and show that Ld is not recursively enumerable. (12)

b)Whether the problem of determining given recursively enumerable language is empty or not? Is

decidable? Justify your answer. (4)

5.Define the language Lu. Check whether Lu is recursively enumerable? or Lu is recursive? Justify your answer. (16)

6.a)Show that the language Ld is neither recursive nor recursively enumerable. (12)

b)Describe how a Turing Machine can be encoded with 0 and 1 and give an example. (4)

7.a)Show that any non trivial property J of the recursively enumerable languages is undecidable. (8)

b)Show that if L and L are recursively enumerable then L and L recursive.

8.Define the universal language and show that it is recursively enumerable but not recursive.

9.Prove that the universal language Lu is recursively enumerable. (16)

10.State and Prove Rice's Theorem for recursive index sets. (16)

11.a)Show that the following language is not decidable.

L={<M>| M is a TM that accepts the string aaab}. (8)

b)Discuss the properties of Recursive and Recursive enumerable languages. (8)

12.a)Define Post correspondence problem with an example. (8)

b)Prove that the function $f(n)=2^n$ does not grow at a polynomial rate, in other words, it does not satisfy $f(n)=O(n^p)$ for any finite exponent p.

13.a)Define the language Ld.Show that Ld is neither recursive nor recursively enumerable. (12)

b)Show that if a language L and its complement L are both recursively enumerable then L is recursive. (4)

14.a)What are the features of a Universal Turing Machine? (4)

b)Show that "If a language L and its compliment L are both recursively enumerable,then both languages are recursive". (6)

c)Show that halting problem of Turing Machine is undecidable. (6)

15.a)Does PCP with two lists x=(b,b ab^3,ba) and y=(b^3 ,ba , a)have a solution?. (6) b)Show that the characteristic function of the set of all even numbers is recursive. (6) c)Let ∑={0,1}.Let A and B be the lists of three strings each,defined as List A List B

i Wi Xi1 1 1112 10111 10310 0

Does this PCP have a solution? (4)

16.a)Show that it is undecidable for arbitrary CFG's G1 and G2 whether L(G1)∩L(G2)Is a CFL. (8)

b)Show that "finding whether the given CFG is ambiguous or not" is undecidable by reduction technique. (8)

17.Find whether the following languages are recursive or recursively enumerable.

(i) Union of two recursive languages. (4)

(ii) Union of two recursively enumerable languages. (4)

(iii) L if L and complement of L are recursively enumerable. (4)(iv)Lu (4)

18.Consider the Turing Machine M and w=01, where

M=({q1,q2,q3},{0,1},{0,1,B},δ,q1,B,{q3}) and δis given by

Reduce the above problem to Post's correspondence Problem and find whether that PCP has a solution or

not. (16)

19. Explain the Post's Correspondence Problem with an example (16)

OBJECT ORIENTED ANALYSIS AND DESIGN
IMPORTANT QUESTIONS

UNIT – 1

2 Marks

1) What is an object?
2) What the main advantages are of object oriented development?
3) What is object oriented system development methodology?
4) Distinguish between method and message in object.
5) What is analysis and design?
6) What is object oriented analysis and design?
7) Define domain model.
8) Give the characteristics of object oriented system.
9) Define − UnifiedProcess(UP)
10) What is the importance of the unified process?
11) What is iterative and evolutionary development?
12) What are the benefits of iterative development?
13) What are the three ways to apply UML?
14) What is analysis and design?
15) What is object oriented analysis and design?
16) Define domain model.
17) Give the characteristics of object oriented system.
18) Define − UnifiedProcess(UP)
19) What is the importance of the unified process?
20) What is iterative and evolutionary development?
21) What are the benefits of iterative development?
22) What are the three ways to apply UML?
23) What are the three perspectives toapplyUML?
24) What are the primary goals in the design of UML?
25) What are the phases of unified process?
26) What do you mean by use cases and actors?
27) Define class diagram.
28) Define activity diagram.
29) What is interaction diagram? Mention its types.
30) What is sequence diagram?
31) What is collaboration diagram?
32) Define start chart diagram?
33) What is meant by implementation diagram?
34) Define component diagram.
35) What is analysis and design?
36) What is object oriented analysis and design?
37) Define domain model.
38) Give the characteristics of object oriented system.
39) Define − UnifiedProcess(UP)
40) What is the importance of the unified process?
41) What is iterative and evolutionary development?
42) What are the benefits of iterative development?

43) What are the three ways to apply UML?
44) What are the three perspectives toapplyUML?
45) What are the primary goals in the design of UML?
46) What are the phases of unified process?
47) What do you mean by use cases and actors?
48) Define class diagram.
49) Define activity diagram.
50) What is interaction diagram? Mention its types.
51) What is sequence diagram?
52) What is collaboration diagram?
53) Define start chart diagram?
54) What is meant by implementation diagram?
55) Define component diagram.
56) Define deployment diagram,
57) Define the inception step.
58) Define a) Include relationship b)Extend relationship

16 Marks

1) Explain briefly about the Four Major phases of Unified Process? (10)
2) By considering the Library management system, Perform the object oriented System Development and give the use case model for the same(use include, extend and generalization) (13)
3) Explain the Fully Dressed use case with an example?(7)
   Explain the Guidelines for writing and finding use cases? (6)
4) (i).Examine the various sections in the Use Case template with example.(8)
   (ii).Classify the various Tests used to find useful use cases.(5)
5) (i).What artifacts may start in Inception? How much UML is required during Inception? (7)
   (ii). Identify the major difference between Evolutionary and water fall requirements.(6)
6) (i).What are the requirements in UP artifacts? (5)
   (ii) List the various categories of Requirements? (8)
7) Describe the use case model for online Exam. (13)
8) (i).Illustrate use case diagram for payroll system. (8)
   (ii).Classify the various format of use case. (5)
9) Generalize the concepts of Next Gen POS system?Briefly explain about Inception Phase.
10) List the Various UML diagrams and explain the purpose of each diagram. (13)
11) Explain Use case modeling with example? (13)
12) (i).Give one Success scenario for ATM system. (7)
    (ii). Give the steps to find actors and goals. (6)
13) Describe a suitable example showing the various relationships used in Use Case and also give a short note on each relationship. (13)
14) Explain with an example, how use case modeling is used to describe functional requirements, Identify actors, scenario and use cases for the example. (13)

UNIT – 2

2 Marks

1) How to Choose the Initial Domain Object?

2) Define patterns.
3) How to Connect the UI Layer to the Domain Layer?
4) Mention the Interface and Domain Layer Responsibilities.
5) How to Apply the GRASP Patterns?
6) Define Responsibilities and Methods.
7) List out some scenarios that illustrate varying degrees of functional
8) Define Modular Design.
9) What are the advantages of Factory objects?
10) What is meant by Abstract Class Abstract Factory?
11) Differentiate coupling and cohesion.
12) What is meant by Fine-Grained Classes?
13) Define coupling.
14) What do you mean by degree of coupling?
15) What do you mean by cohesion? Give the types of cohesion.
16) What do you mean by design patterns?
17) What are the three basic types of attributes?
18) What is a Metaphor?
19) Give the three UI design rules.
20) Define Package.
21) What is concurrency policy?

16 Marks

1) Explain GRASP: designing objects with responsibilities.
2) Explain GoF design patterns.
3) Discuss about creator and information expert.
4) Explain about low coupling and high cohesion.
5) Explain about factory and observer patterns.
6) Explain adapter and singleton with an example.

UNIT – 3

2 Marks

1) What is Inception?
2) What Artifacts May Start in Inception?
3) Define Requirements and mention its types.
4) What are Actors?
5) What is a scenario?
6) Define Use case.
7) What are Three Kinds of Actors?
8) What Tests Can Help Find Useful Use Cases?
9) What are Use Case Diagrams?
10) What are Activity Diagrams?
11) What is Elaboration?
12) What are the tasks performed in elaboration?
13) What are the key ideas and best practices that will manifest in elaboration?
14) What artifacts may start in elaboration?
15) What are the key ideas for Planning the Next Iteration?
16) What is a Domain Model?

17) How the domain model is illustrated?
18) Why Call a Domain Model a "Visual Dictionary"?
19) What are the elements not suitable in a domain model?
20) What are Conceptual Classes?
21) How to Create a Domain Model?
22) How to Find Conceptual Classes?
23) Define Association.
24) What is Aggregation?
25) What is composition?

16 Marks

1) Explain about NextGen POS system.
2) Explain about inception.
3) Discuss about conceptual classes description classes with examples.
4) Explain about association and attributes.
5) Briefly discuss about elaboration use case modeling.
6) Explain about aggregation and composition.

OCE551 - AIR POLLUTION AND CONTROL ENGINEERING

UNIT - I - INTRODUCTION

PART - A

1. Define Air pollution ?

Air pollution is the excessive concentration of foreign matters in the air which adversely affects the human beings of the individual or causes damage to the property (Or) Any substance in the air that causes damages to health and properties. (Or) The presence in ambient atmosphere of substances, generally resulting from the activity of man, in sufficient concentration, present for a sufficient time and under circumstances to interfere significantly with comport, health or welfare of persons or with full use or enjoyment of property.

2. What are natural contaminants?

Natural fog, pollen grains, bacteria and product of volcanic eruption.

3. How inhalation of carbon monoxide affects human health?

It reduces the ability of the hemoglobin to carry oxygen to the body tissues. Neurological disasters take place.

4.What is Fog?

Visible aerosols in which the dispersed phase in liquid.

5.Correlations between weather variables and ozone concentrations ?

Better correlation in summer and at inland stations. Most important variables for ozone prediction: 850-mb (about 5,000 feet high) temperature. 950-mb temperature, inversion base height, inversion magnitude, and maximum mixing height also show significant correlations with ozone concentration.

6. Briefly explain the formation of Ozone?

Photochemical (summer smog) forms when pollutants such as nitrogen oxides and organic compounds react together in the presence of sunlight. A gas called ozone is formed Nitrogen Dioxide + Sunlight + Hydrocarbons.

7. Ozone ?

This is a very general representation of the formation of ozone in the lower atmosphere. In actual fact, many different chemical reactions produce Ozone.

8. List out any four sources of Air Pollution?

Combustion process, Chemical processes, Petroleum operations and Metallurgical processes.

9. What is Smog? Give the types ?

Smog is a synchronism of two wards- smoke and fog. Smoke can be of two types photochemical or coal induced.

10. Briefly Explain Particulate matters ?

Particulate matter," also known as particle pollution or PM, is a complex mixture of extremely small particles and liquid droplets. Particle pollution is made up of a number of components, including acids (such as nitrates and sulfates), organic chemicals, metals, and soil or dust particles.

11. Effect of Pollution Damage to Plants ?

With the destruction and burning of the rain forests more and more CO2 is being released into the atmosphere. Trees play an important role in producing oxygen from carbon dioxide. "A 115 year old Beech tree exposes about 200,000 leaves with a total surface to 1200 square meters. During the course of one sunny day such a tree inhales 9,400 liters of carbon dioxide to produce 12 kilograms of carbohydrate, thus liberating 9,400 liters of oxygen. Through this mechanism about 45,000 liters of air are regenerated which is sufficient for the respiration of 2 to 3 people". This process is called photosynthesis which all plants go through but some yield more and some less oxygen. As long as no more wood is burnt than is reproduced by the forests, no change in atmospheric CO2 concentration will result.

12. How to Reduce the Pollution ?

You can help to reduce global air pollution and climate change by driving a car that gets at least 35 miles a gallon, walking, bicycling, and using mass transit when possible. Replace incandescent light bulbs with compact fluorescent bulbs, make your home more energy efficient, and buy only energy efficient appliances. Recycle newspapers, aluminum, and other materials. Plant trees and avoid purchasing products such as Styrofoam that contain CFCs. Support much stricter clean air laws and enforcement of international treaties to reduce ozone depletion and slow global warming

13. What are the effects of photo chemical smog?

Eye irritation, Vegetation Damage, Visibility Reduction, Cracking of Rubbers

14. Classification of sampling Methods ?

Insitu sampling and remote sensing

15. Define Acid rain ?

Acid rain (or acid deposition, as it's called in technical circles) is produced by the burning of fossil fuels. It is formed when emissions of sulfur dioxide and nitrogen oxides react in the atmosphere with water, oxygen and oxidants to form various acidic compounds. These compounds then fall to the ground in either wet or dry form. Refer to all precipitation-rain, snow, and dew which is more acidic than normal.

16. Define Photo chemical reaction ?

Any chemical reaction that is initiated as a result of absorption of light.

17. List out the Air pollution emission source ?

Point source, Line sources, Area source, Volume source

18. Definition of the Term "Portable" ?

The word portable typically conveys an object that is "Carried or moved with ease, such as a light or small box

19. Definition of the Term "Mobile" ?

The definition of mobile is essentially "…capable of moving or of being moved readily from place to place: a mobile organism; a mobile missile system."

20. Briefly explain greenhouse effect ?

The greenhouse effect is the heating of the surface of a planet or moon due to the presence of an atmosphere containing gases that absorb and emit infrared radiation. Thus, greenhouse gases trap heat within the surface-troposphere system. This mechanism is fundamentally different from that of an actual greenhouse, which works by isolating warm air inside the structure so that heat is not lost by convection. The greenhouse effect was discovered by Joseph Fourier in 1824, first reliably experimented on by John Tyndall in 1858, and first reported quantitatively by Svante Arrhenius.

21. Explain the term global warming ?

Global warming is the increase in the average temperature of the Earth's near-surface air and oceans since the mid-20th century and its projected continuation. Global surface temperature increased 0.74 ± 0.18 °C (1.33 ± 0.32 °F) during the last century. The Intergovernmental Panel on Climate Change (IPCC) concludes that most of the observed temperature increase since the

middle of the 20th century is caused by increasing concentrations of greenhouse gases resulting from human activity such as fossil fuel burning and deforestation

22. Define aerosols ?

An aerosol can be defined as a dispersion of solid and liquid particles suspended in gas. Atmospheric aerosols, unsurprisingly, refer to solid and liquid particles suspended in air. Aerosols are produced by dozens of different processes that occur on land and water surfaces, and in the atmosphere itself. Aerosols occur in both the troposphere and the stratosphere, but there are considerable differences in the size ranges, chemical nature and sources of the aerosols that occur in these two atmospheric layers.

23. Effect on CO ?

The main and immediate benefits of using reformulated gasoline in the car is the reduction in the CO exhaust emissions levels. The addition of an oxygenate such as MTBE to the gasoline provides extra oxygen to the fuel combustion process and it works in the same way as the oxygen contained in the external combustion air supplied to the engine. As a result, more complete combustion of the hydrocarbons occur and more CO is oxidized to CO2. The net results is a decrease in the concentrations of CO exhaust emissions.

24. Effect on Ozone Formation ?

The reformulated gasoline containing MTBE decreases the ozone formation in the atmosphere. The oxygen present in the MTBE added to the gasoline ensures more complete combustion of fuel hydrocarbons and thus UBHC released to the atmosphere are reduced. As stated earlier, a reduction in NO_x level is also achieved using MTBE-gasoline blends. Both hydrocarbons as well as NO_x are precursors of ozone formation. Thus a reduction in the concentrations of precursors decreases the ozone formation in the atmosphere.

25. What are Effects of Air Pollutants ?

Air pollution effects may also be divided into several categories, with such effects encompassing those that are health-related as well as those associated with damage to materials or which cause decreases in atmospheric aesthetic features. Examples of effects on human health include eye irritation, headaches and aggravation of respiratory difficulties. Plants and crops have been subjected to undesirable consequences of air pollution, including abnormal growth patterns, leaf discoloration or spotting and death. Property damage include property devaluation because of odors, deterioration of materials such as concrete statutory, discoloration of painted surfaces. The aesthetic effects include reductions in visibility, discoloration of air, photochemical smog- related traffic disruptions at airports and the general nuisance aspects of odors and duct.

26. Define Pollution ?

Unfavorable alteration of our surroundings or the process of discharging unwanted matters into environment which causes harmful effects on living beings and damage to materials. The quality of environment (air, water, soil) is affected due to the presence of pollutants. Pollutant is any substance present in the environment which can cause harmful effects to living organisms and materials. Pollutants may be solid, liquid or gas.

27. Define the Classification of Pollutants ?

Primary and Secondary Pollutants

28. What are Primary Pollutants and Define with Examples ?

The substance emitted directly to environment from an identifiable source is called as primary pollutants. Eg. SO_2, NO_2, CO.

29. What are Secondary Pollutants and Define with Examples?

They are formed from the primary pollutants by chemical interaction between various constituents present in the atmosphere. Eg. H_2CO_3, H_2SO_4, HCHO, PAN (PeroxyAcyl Nitrate).

30. Define the Expansion of PAN and define it ?

PeroxyAcyl Nitrate (PAN).

31. Describe about Biodegradable Pollutants ?

Based on the decomposition properties of pollutants they are classified as Biodegradable and Non biodegradable pollutants.

The pollutants which are readily decomposed by natural process or microbial action are called biodegradable pollutants. Eg. Municipal sewage, dead plants and animals.

32. Define Non Biodegradable pollutants ?

Based on the decomposition properties of pollutants they are classified as Biodegradable and Non biodegradable pollutants.

The pollutants are not readily decomposed or slowly decomposed by natural process and microbial action. Eg. Mercury, Lead, Aluminum, DDT, Long chain phenolic compounds.

33. What is mean by Synergism ?

The phenomenon of increased toxicity by chemical interaction among the pollutants are known as synergism.

34. Discuss about different kinds of Pollution ?

Air, Water, Soil, Marine, Noise, Thermal and Nuclear Hazards**.**

35. Elucidate the Composition of N_2, O_2 and Argon in the atmospheric air ?

N_2 = 78%, O_2 = 21%, Argon = < 1%

36. What are natural sources of Air Pollution ?

Natural sources causes large scale of air pollution which is beyond man's control. Eg. Volcanic eruptions, Forest fires, Biological decay, Pollen grains, Marshes, Wind dust blown, Sea salt can cause air pollution.

37. Define Man made sources of Air pollution ?

These are also called as Anthropogenic activities. Industries emit SO_2, NO_2, HF, HCl, H_2S, dust, fumes. Automobiles emit hazardous pollutants like CO, CH_4, NO, Lead. Advanced agricultural techniques release DDT, BHC, Organic phosphates, Arsenic, Lead.

38. Explain Organic Pollutants with examples ?

According to the chemical composition they are classified as Organic pollutants and Inorganic Pollutants.

Eg. Hydrocarbons, aldehydes, ketones and amines.

39. Explain Inorganic Pollutants with examples ?

According to the chemical composition they are classified as Organic pollutants and Inorganic Pollutants.

Eg. NO_x, SO_2, SO_3, H_2S, HF, HCl.

40. Define Gaseous Pollutants ?

Eg. CO, CO_2, NO_x, SO_x

41. Define Particulate Pollutants ?

It consists of finely divided solids, liquids, colloids. Eg. smoke, mist, dust. Air pollutants are produced at outdoor and indoor levels.

42. Elucidate about Outdoor air pollutants ?

It occurs both in urban and rural areas. This is due to human activities.

43. Elucidate about Indoor air pollutants ?

These are the primary air pollutants. Eg. Radon gas is emitted from building materials like bricks, tiles. CO and Benzene from cigerette smoke. Burning fuels in kitchen liberates CO, SO_2, HCHO, BAP. (Benzo - (a) pyrene).

OCE551 - AIR POLLUTION AND CONTROL ENGINEERING

UNIT - II - METEOROLOGY

PART - A

1. What is adiabatic lapse rate ?

The decrease of atmosphere temperature with height.

2. List out any four sampling methods ?

Sedimentation, filtration, Impingement, ESP.

3.National Ambient Air Quality Standard for ozone (NAAQS) ?

Primary standard to protect public health. One-hour average ozone > 0.12 ppm for federal standard. One-hour average ozone > 0.09 ppm for state standard.

4. Define Ambient air quality ?

A physical and chemical measure of the concentration of contaminants in the ambient atmosphere. The quality is usually monitored over a specific period.

5. What is the word MINAS stands for ?

Minimum National Air Quality Standards.

6. What is Mixing Height ?

Height above the earth's surface to which related pollutants will extend, primarily through the action of atmospheric turbulence.

7. Define Fumigation ?

The phenomenon in which pollutants that are aloft in the air are brought rapidly to ground level when the air destabilizes.

8. Define Dispersion ?

The mixing of gases contain the high concentration of pollutant.

9. Write short note on Air monitoring ?

The process of detention and measurement of pollutants in air.

10. Define Mass concentration ?

Concentration expressed in terms of mass of a substance per unit volume of gas or liquid.

11. What do you meant by Pressure drop ?

The differential pressure b/w two points in a system. The resistance to flow b/w in the two points.

12. Relative humidity ?

The ratio of the actual vapors pressure of the air to the saturation vapor pressure.

13. What is Inversion ?

Condition in the atmosphere in which air temperature increases with elevation, under this conditions, the atmosphere is said to be in stable equilibrium.

14. Briefly explain Box model dispersion ?

The box model is the simplest of the model types It assumes the air shed (i.e., a given volume of atmospheric air in a geographical region) is in the shape of a box. It also assumes that the air pollutants inside the box are homogeneously distributed and uses that assumption to estimate the average pollutant concentrations anywhere within the airshed. Although useful, this model is very limited in its ability to accurately predict dispersion of air pollutants over an air shed because the assumption of homogeneous pollutant distribution is much too simple.

15. Briefly explain Gaussian model ?

The Gaussian model is perhaps the oldest (circa 1936) and perhaps the most commonly used model type. It assumes that the air pollutant dispersion has a Gaussian distribution, meaning that the pollutant distribution has a normal probability distribution. Gaussian models are most often used for predicting the dispersion of continuous, buoyant air pollution plumes originating from ground-level or elevated sources. Gaussian models may also be used for predicting the dispersion of non-continuous air pollution plumes (called puff models). The primary algorithm used in Gaussian modeling is the Generalized Dispersion Equation for a Continuous Point-Source Plume.

16. Explain Lagrangian dispersion model ?

A Lagrangian dispersion model mathematically follows pollution plume parcels (also called particles) as the parcels move in the atmosphere and they model the motion of the parcels as a random walk process. The Lagrangian model then calculates the air pollution dispersion by computing the statistics of the trajectories of a large number of the pollution plume parcels. A

Lagrangian model uses a moving frame of reference] as the parcels move from their initial location. It is said that an observer of a Lagrangian model follows along with the plume.

17. Briefly explain Eulerian dispersion model ?

Eulerian dispersions model is similar to a Lagrangian model in that it also tracks the movement of a large number of pollution plume parcels as they move from their initial location. The most important difference between the two models is that the Eulerian model uses a fixed three- dimensional Cartesian grid as a frame of reference rather than a moving frame of reference

18. Briefly explain Dense gas dispersion model ?

Dense gas models are models that simulate the dispersion of dense gas pollution plumes (i.e., pollution plumes that are heavier than air). The three most commonly used dense gas models are: The DEGADIS model The SLAB model The HEGADAS model

19. What is Lofting ?

A type of plume which occurs when an inversion exits only below the plume and the plume is inhibited from mixing downward.

20. What is Looping ?

A type of plume which has a wavy character. It occurs in a highly unstable atmosphere because of rapid mixing.

21.What is Chimney ?

A structure with an opening or outlet from or through which any air pollutant may be emitted.

22. Define Coning ?

A type of plume which is like a cone. This take place in a near neutral atmosphere when the wind velocity is greater than 32km/h.

23. What is Plume ?

The path and extent in the atmosphere of the gaseous effluent released from the source, usually a stack

24. Briefly explain Chimney effect ?

The vertical penetration of smog through the inversion layer on the south slope of the San Gabriel and San Bernardino Mountains caused by the strong solar heating in the afternoon.

25. Define Fall out ?

A radioactive pollutant in the air caused after the explosion of a nuclear device, its degree of contamination depending on several factors, such as distance, wind, and power of the device.

26. Explain Meteorological factors ?

i) Air movements influence the fate of air pollutants. so, any study of air pollution should include a study of a local weather patterns (Meteorology).

ii) If the air is calm and pollutants cannot disperse, then the concentration of these pollutants will build up. on the other hand, when strong, turbulent winds blow, pollutants disperse quickly, resulting in lower pollutant concentrations.

27. How Meteorological data helps ?

i) Identify the source of pollutants

ii) Predict air pollution events such as inversions and high pollutant concentration days.

iii) Simulate and predict air quality using computer models.

28. When studying air quality what are the factors to measure ?

When studying air quality, it is important to measure the following factors as they can help us understand the chemical reactions that occur in the atmosphere. Wind speed and Direction, Temperature, Humidity, Rainfall, Solar Radiation.

29. Elucidate wind speed and direction ?

When high pollutant concentrations occur at a monitoring station, wind data records can determine the general direction and area of the emissions. Identifying the sources means planning to reduce the impacts on air quality can takes place. An instrument called anemometer measures wind speed and at out monitoring stations, the type of anemometer we use is a sonic anemometer.

30. How temperature is measured ?

Measuring temperature supports air quality assessment, air quality modelling and forecasting activities. Temperature and sunlight (Solar Radiation) play an important role in the chemical reactions that occur in the atmosphere to form photochemical smog from other pollutants. Favorable conditions can lead to increased concentrations of smog. the most common way of measuring temperature is to use a material with a resistance that changes with temperature such as platinum wire. A sensor measures this change and converts it into a temperature reading.

31. Describe the measurement of Humidity ?

Water vapour content of air is reported as a percentage of the saturation vapour pressure of water at a given temperature. This is the relative humidity. Measuring humidity uses the absorption properties of a polymer film. the film either absorbs or loses water vapour as the relative humidity of the ambient air changes. A sensor measures these changes and converts them into a humidity reading.

32. Elaborate the Rainfall measurements ?

Rain has a scavenging effect when it washes particulate matter out of the atmosphere and dissolves gaseous pollutants. Removing particles improves visibility where there is frequent high rainfall, air quantity is generally better. A common method to measure rainfall is to use a Tipping Bucket Rain gauge. The instrument calculates the quantity and intensity of rainfall using with the area of the funnel and the number and the rate of bucket movements.

33. What is atmospheric stability and explain with lapse rate and its stability ?

The ability of atmosphere to enhance or to resist atmospheric motions. A simple way to determine the atmospheric stability is to use dry adiabatic lapse rate and Environmental lapse rate.

ELR > DALR = Sub adiabatic condition, atmosphere is stable.

ELR > > DALR = inversions conditions. very stable atmosphere.

ELR = DALR = Atmosphere is neutral

ELR < DALR = Super adiabatic condition, atmosphere is unstable.

34. Note the conditions for temperature or thermal inversions with examples ?

Under certain meteorological conditions the air is very stable and a layer of cooler, dense air lies near the ground with a layer of warmer air above. This condition is called as temperature or thermal inversion and it prevents emissions from dispersing and pollutants build up under the inversion. It clearly shows a thermal inversion where the sides of the valley contain the cool air near the ground.

35. Explain the important characteristics in atmospheric stability ?

i) Affects dispersion of pollutants

ii) Temperature elevation relationship principal determinant of atmospheric stability

iii) Stable - little vertical mixing and pollutants emitted near surface tend to stay there.

iv) Environmental Lapse Rate (ELR) is same as Dry Adiabatic Lapse Rate (DALR)

v) Shapes of plumes depends upon atmospheric stability conditions.**?**

36. What are the general characteristics of stack plumes ?

i) Dispersion of pollutants.

ii) Wind - carries pollution downstream from source.

iii) Atmospheric turbulence - causes pollutants.

iv) fluctuate from main stream in vertical and crosswind directions.

v) Mechanical and atmospheric heating both present at same time but in varying ratios.

vi) Affect plume dispersion differently.

37. What are the types of plumes ?

Plume types are important because they help us understand under what conditions of contaminants at ground level. Looping plume, Coning plume, Fanning plume, Lofting plume, Fumigation.

38. Note about fanning plume ?

i) It occurs under large nagative lapse rate

ii) Strong inversion at a considerable distance above the stack

iii) Extremely stable atmosphere

iv) Little turbulence

v) If plume density is similar to air, travels downwind at approximately same elevation.

39. Elucidate the factors that affects diffusion of pollutants ?

i) Diffusion of pollutants occur due to turbulence, which further depends upon many factors.

ii) Ambient temperature, Temperature of emissions, Roughness factors, Wind velocity, Wind direction, Humidity and Stability.

OCE551 - AIR POLLUTION AND CONTROL ENGINEERING

UNIT - III - CONTROL OF PARTICULATE CONTAMINANTS

PART - A

1. Explain the principle behind settling chambers ?

Particles in the air or gas stream settle due to gravity.

2. Write down the various types of Inertial Separation ?

Baffle type, Louvre type, Dust trap.

3. Name the common method of filter cleaning ?

Rapping, Shaking, Reverse air low, Pulse jet.

4. State the Principle of cyclone filter ?

Control of gas borne pollution, particulates using centrifugal and inertial methods.

5. What is adsorption?

Removal of impurities from a gas stream by concentration on the surface of solid or liquid.

6. What are the Advantages of ESP ?

i) High collection efficiency.

ii) Particle as small as 0.1 mm can be removed.

iii) Low maintained and operating cost.

iv) Low-pressure drop (0.25 – 1.25 cm of water.

v) Treatment time is negligible (0.1 – 10. s).

7. What are the Disadvantages of Esp ?

i) High initial cost.

ii) Space requirement is more.

iii) Possible explosion hazards during collection of combustible gases or particles.

iv) Poisonous gas , ozone , is produced by the negatively charged electrodes during gas ionization.

8. Briefly explain Bag filter ?

The most common type of collector is tubular type, consisting of tubular bags. A bag house or bag filter consists of numerous vertical bags. They are suspended with open ends attached to a manifolds

9. List out the type of Scrubbers ?

Spray towers, Venturi scrubbers, Cyclone scrubbers, Packed scrubbers, Mechanical scrubbers

10. Define Impinger ?

A sampling instrument adopting the principle of impingement for the collection of particulate matters.

11. What is Bag house ?

An air pollution control device that traps gas borne particulate by forcing the gas through filter bags

12. Define the term Contaminant ?

Unwanted material usually harmful or of a nuisance value or both

13. Define Cyclone filter ?

A type of particulate collector which depends upon centrifugal force for its action.

14. What is meant by Dry bulb temperature ?

The actual temperature of the gas. Measured with a conventional thermometer.

15. Define Fumigation ?

The phenomenon in which pollutants that are aloft in the air are brought rapidly to GL when the air destabilizes.

16. What is Incineration ?

Combustion of solid, liquid, or gases wastes under controlled condition.

17. What is meant by Inertial separators ?

Air pollution control equipment that utilizes the principles of inertial to remove particulate matter from a stream of air or gas.

18. What Is the Chemical Composition of Air ?

Atmosphere is made up of only five gases: nitrogen, oxygen, water vapor, argon, and carbon dioxide. Several other compounds also are present. Although this CRC table does not list water vapor, air can contain as much as 5% water vapor, more commonly ranging from 1- 3%. The 1- 5% range places water vapor as the third most common gas.

19. What is a wind rose ?

A wind rose is a circular display of how wind speed and direction are distributed at a given location for a certain time period. [or] Windrose plots are usually used to display values which are related to compass directions. For example it could be used to illustrate measured wind strengths over a time period in different directions. An basic Windrose plot Illustrates a basic example of a windrose graph with one windrose plot.

20. What causes condensation ?

Condensation is the formation of liquid drops of water from water vapor. It is the process which creates clouds, and so is necessary for rain and snow formation as well. Condensation in the atmosphere usually occurs as a parcel of rising air expands and cools to the point where some of the water vapor molecules clump together faster than they are torn apart from their thermal energy.

21. Combustion Definition ?

Combustion is a chemical reaction chemical that occurs between a fuel and an oxidizing agent that produces energy, usually in the form of heat and light.

22. Define Atmospheric Stability and Instability Atmospheric stability ?

The temperatures normally increase as we get closer to the earth's surface. This is due in part to the greater molecular activity of denser, more compressed air at lower altitudes. These conditions change throughout a 24-hour period, as the daytime solar heating and nighttime heat loss to and through the atmosphere tend to modify the temperature distributions.

23. Define Stable and Unstable Air ?

Weather is strongly affected by how stable or unstable the atmosphere is. Stable air means that the weather is likely to be calm. It may rain or snow slowly and steadily, it may be sunny, but the weather will not change quickly. Unstable air means that the weather might

change quickly with very little warning. Unstable air leads to sudden thunderstorms. What makes the atmosphere stable or unstable? Picture an invisible box of air called an air parcel. If we compare the temperature of this air parcel to the temperature of air surrounding it, we can tell if it is stable (likely to remain in place) or unstable (likely to move).

24. Briefly explain the Control equipment in air pollution ?

Any apparatus, devices, equipment or system to control the quality and manner of emission of any air pollution and includes any devices used for securing the efficient operation of any industrial plant.

25. Define Due point ?

For air containing water vapor, it is the temperature at which liquid water begins to condense for a given state of humidity and pressure, as the temperature is reduced.

26. What is Dust fall ?

The weight of particulate matter deposited due to gravitational action per unit time per unit area of the surface.

27. Explain about Electrostatic Precipitators ?

An electrostatic precipitator (ESP) is a particle control device that uses electrical forces to move the particles out of the flowing gas stream and onto collector plates.

28. Discuss the principle of Electrostatic precipitator ?

The ESP places electrical charges on the particles causing them to be attracted to oppositely charged metal plates located in the precipitator. the particles are removed from the plates by rapping and collected in a hopper located below the unit. the removal efficiencies for ESPs are highly variable, however, for very small particles alone, the removal efficiency is about 99%.

29. What are fabric filters and its principle ?

It removes dust from a gas stream by passing the stream through a porous fabric and is efficient at removing fine particles and can exceed efficiencies of 99% in most applications.

30. what are the characteristics of fiber materials ?

The selection of the fiber material and fabric construction is important to bag house performance. The fiber material from which the fabric is made must have adequate strength characteristics at the maximum gas temperature expected and adequate chemical compatibility with both the gas and the collected dust.

31. Explain venturi scrubbers and its principle ?

Venturi scrubbers use a liquid stream to remove solid particles. In this gas laden with particulate matter passes through a short tube with flared ends and a constricted middle. This constriction causes the gas stream to speed up when the pressure is increased. These are effective in removing small particles with removal efficiencies of up to 99%.

32. Discuss the principle involved in gravity separators ?

It separates products of same size but with difference in specific weight. It has a vibrating rectangular deck, which makes it easy for the product to travel a longer distance, ensuring improved quality of the end product.

33. Explain the concepts involved in gravity separation ?

It is a method of separating two components either a suspension or dry granular mixture when separating the components with gravity is sufficiently practical. the components of the mixture have different specific weight. All the gravitational methods are common in the sense that they all use gravity as (separator) the dominant force.

34. Describe about the methods used other than gravity separation and why ?

Other methods like flocculation, Coagulation and suction are often used methods. Because these methods are applied to make the separation faster and more efficient.

35. What are the advantages of gravitational methods ?

The main advantage of gravitational methods are their cost effectiveness and excellent reduction.

36. Discuss about centrifugal separators ?

These high efficiency cyclones are frequently used as product receivers as pre cleaners to high efficiency fabric type dust collectors or as independent collectors for coarse dusts.

37. What are the advantages of centrifugal separators ?

i) Stable pressure drop for a given gas flow.

ii) Constant efficiency for a given particulate condition.

iii) No moving parts , no replaceable filters.

iv) Ability to handle extremely high dust concentration.

v) High temperature capability**.**

38. Explain Efficiency ?

Efficiency is a function of the physical parameters of the applications and the design parameters of the cyclone. Cyclone efficiency increases with coarse particle size distribution, Higher product specific gravity, Lower gas density.

39. Define the principle of centrifugal separators ?

A centrifugal separator is a separation device that uses the principle of inertia to remove particulate matter from flue gases. In this separators, dirty flue gas enters a chamber containing a vortex, similar to a tornado. Because of the difference in inertia of gas particles and larger particulate matter, the gas particles move up the cylinder while larger particles hit the inside wall and drop down. Thus separates the particulate matter from the flue gas and leaving cleaned flue gas.

40. Elucidate the term Recycling ?

Gravity separators are used to remove viable or valuable components from the recycling mixture i.e. metal from plastic, rubber from plastic, different grades of plastic and these valuable materials are further recycled and reutilized.

41. What are the type of gravity separators ?

Conventional Jigs, Pinched Sluices, Spirals, Centrifugal Jigs, Shaking Tables.

OCE551 - AIR POLLUTION AND CONTROL ENGINEERING

UNIT - IV - CONTROL OF GASEOUS CONTAMINANTS

PART - A

1. **How do any calculate the efficiency of the separating Device ?**

ή= {Quantity of particulates collected from the gas / Quantity present in the gas}

2. What do you mean by Emission standards ?

Level for specific group of emitter and require that all member of these groups emit no more than these permitted emission level

3. Define Particle Re-entrainment ?

It is associated with particle charging, It is occurs due to inadequate precipitator area ,or inadequate dust removal from hopper

4. Air pollution index ?

An arbitrarily derived mathematical combination of air pollutions witch give a single number trying to describe the ambient air quality.

5. Define Pollution Standard Index (PSI) ?

A numerical scale of 0-500 corresponding to various pollution concentrations

6. Define Air quality criteria ?

Scientific information about the levels of air pollution and the durations of exposure which result in adverse effects on health and welfare

7. Air Quality Index (AQI implemented since July 23, 1999 by EPA) ?

AQI is calculated for the 6 criteria pollutants according to the EPA formulas. The highest AQI value is adopted as the daily AQI. Foe example, if the AQI for ozone is 90 and 88 for SO2.The reported AQI is 90.

8. Define Pollution Potential ?

Holzworth's definition:

C/Q = L/UH

C: pollution concentration.

Q: emission rate.

L: city size along wind dimension (10 km or 100 km).

U: wind speed.

H: mixing height (height to which an air parcel can rise)

9. How do you Measure Air Quality ?

There are many ways to measure air pollution, with both simple chemical and physical methods and with more sophisticated electronic techniques. There are four main methods of measuring air pollution. Passive sampling methods Active sampling methods Automatic methods Remote optical / long path-analyzers use spectroscopic techniques, make real-time measurements of the concentrations of a range of pollutants including nitrogen dioxide and sulphur dioxide.

10. Definition of the Term "Instrumented" ?

Instrumented means to be "a device for recording, measuring, or controlling, especially such a device functioning as part of a control system."

11. Name some NOx control units ?

Low NOx burners Selective catalytic reduction (SCR) Selective non-catalytic reduction (SNCR), NOx scrubbers the Exhaust gas recirculation and Catalytic converter (also for VOC control)

12. Effective Methods to Control Air Pollution ?

Some of the effective methods to Control Air Pollution are as follows: (a) Source Correction Methods (b) Pollution Control equipment (c) Diffusion of pollutant in air (d) Vegetation (e) Zoning.

13. What is the Air Quality Index for Health ?

The Environmental Protection Agency's Air Quality Index for Health (AQIH) is a number from one to 10 that tells you what the air quality currently is in your region and whether or not this might affect the health of you or your child. A reading of 10 means the air quality is very poor and a reading of one to three inclusive means that the air quality is good. The AQIH is calculated every hour. You can see the current readings on the AQIH map.

14. Is indoor air quality safety concern (IAQ) a health and safety concern ?

Indoor air quality has become an important health and safety concern. Common issues associated with IAQ include: Improper or inadequately maintained heating and ventilation

systems. Contamination by construction materials, glues, fibreglass, particle boards, paints, chemicals, etc. Increase in number of building occupants and time spent indoors.

15. What are the common causes of IAQ problems ?

IAQ problems result from interactions between building materials and furnishing, activities within the building, climate, and building occupants. IAQ problems may arise from one or more of the following causes: Indoor environment - inadequate temperature, humidity, lighting, excessive noise Indoor air contaminants - chemicals, dusts, moulds or fungi, bacteria, gases, vapours, odours Insufficient outdoor air intake.

16. What are indoor air contaminants ?

Here are examples of common indoor air contaminants and their main sources: Carbon dioxide (CO2), tobacco smoke, perfume, body odours – from building occupants Dust, fibreglass, asbestos, gases, including formaldehyde – from building materials Toxic vapours, volatile organic compounds (VOCs) – from workplace cleansers, solvents, pesticides, disinfectants, glues Gases, vapours, odours – off-gas emissions from furniture, carpets, and paints Dust mites – from carpets, fabric, foam chair cushions Microbial contaminants, fungi, moulds, bacteria, – from damp areas, stagnant water and condensate pans Ozone – from photocopiers, electric motors, electrostatic air cleaners

17. Define Zoning ?

Zoning describes the control by authority of the use of land, and of the buildings thereon. Areas of land are divided by appropriate authorities into zones within which various uses are permitted.

18. What is the necessity for air quality?

The levels of air quality necessary with an adequate margin of safety, to protect the public health, vegetation and property.

19. Define frequency and Method of Air Quality Measurements ?

The present study of air quality measurement in terms air pollution concentration has been obtained by continuous monitoring for a period of eight hours at all directions and at the proposed project site. The annual mean wind direction pattern has been compiled from the long-term data made available from meteorological department. The sampling directions around the project site has been selected so as to reflect the impact of anthropogenic activities such as emissions from transportation, generation of dust with movement of vehicles, emissions from industrial and domestic activities. Considering the facilities and significant impact on air quality we have selected Suspended Particulate Matter (SPM), Sulphur dioxide (SO2), Nitrogen Oxides (Nox) and Carbon monoxide (CO).

OCE551 - AIR POLLUTION AND CONTROL ENGINEERING

UNIT - V - INDOOR AIR QUALITY MANAGEMENT

PART - A

1. What is noise ?

In simple terms, noise is unwanted sound. Sound is a form of energy which is emitted by a vibrating body and on reaching the ear causes the sensation of hearing through nerves.

2. How can noise affect us ?

Temporary Deafness: This Persists for about 24 hours after exposure to loud noise. Permanent Deafness: Repeated or continuous exposure to noise of around 100 dB results in permanent hearing loss.

3. How can we control the Noise source ?

Reducing the noise levels from domestic sectors, Maintenance of automobiles, Control over vibrations, Low voice speaking, Prohibition on usage of loud speakers and Selection of machinery

4. What is the difference between sound and noise ?

Noise is unwanted sound. Sound is a form of energy emitted by a vibrating body and on reaching the ear it causes the sensation of hearing through nerves.

5. What is the purpose of frequency analysis ?

frequency analysis allow to separate the main components of the signals by dividing the frequency range of interest into smaller frequency bands using a set of filters

6. List out typical sources of noise pollution ?

Source Noise level dB(A) Air compressors 95-104 Quiet garden 30 110 KVA diesel generator 95 Ticking clock 30 Lathe Machine 87 Computer rooms 55-60 Milling machine 112 Type institute 60 Oxy-acetylene cutting 96 Printing press 80 Pulveriser 92 Sports car 80-95 Riveting 95 Trains 96 Power operated portable saw 108 Trucks 90-100 Steam turbine (12,500 kW) 91 Car horns 90-105 Pneumatic Chiseling 118 Jet takeoff 120.

7. What are the impacts of noise ?

Physiological effects, Loss of hearing, human performance, Nervous system: Annoyance, Sleeplessness, Damage to material.

8. What are the methods to control noise pollution ?

Identify the noise sources from each zone, Find out the noise levels of each zone, Compute Ldn values, Identify the likely causes of noise from noise sources, Develop methodologies to solve the problem, Attempt to solve.

9. What are the noise exposure limits in a workspace environment ?

Regulations prescribe that, noise level of 90 dB (A) for more than 8 hr continuous exposure is prohibited. Persons who are working under such conditions will be exposed to occupational health hazards.

10. What are the ambient noise limits ?

Sounds produced by all vibrating bodies are not audible. The frequency limits of audibility are from 20 Hz to 20,000 Hz. Noise generation is associated with most of our daily activities. A healthy human ear responds to a very wide range of SPL from - the threshold of hearing at zero dB, uncomfortable at 100-120dB and painful at 130-140 Db. Due to the various adverse impacts of noise on humans and environment noise should be controlled.

11. Write short notes on Decibel, dB and Ldn ?

DECIBEL is measurement unit of sound, represented by dB. The day night equivalent noise levels of a community can be expressed as -Ldn , dB(A) = 10 x log10 [15/24 (10Ld/10) + 9/24 (10(Ln + 10)/10)] where, Ld = day-equivalent noise levels (from 6AM - 9 PM), dB (A) Ln = night equivalent noise levels (from 9 PM - 6 AM), dB (A) The day hours in respect to assessment of noise levels, is fixed from 6 AM - 9 PM (i.e., 15hrs) and night hours from 9 PM - 6 AM (i.e., 9 hrs). A sound level of 10 dB is added to Ln due to the low ambient sound levels during night for assessing the Ldn values.

12. Write short notes on Infrasonic and Ultrasonic Infrasonic ?

The sound of frequency less than 20Hz. Ultrasonic: The sound of frequency more than 20,000 Hz

13. Equipment used in the measurement of noise levels ?

Sound level meter Type-0 : Laboratory reference standard Type-1: Lab use and field use in specified controlled environment Type-2: General field use (Commonly used) Type-3: Noise survey Impulse meters For measurement of impulse noise levels e.g. hammer blows, punch press strokes etc. Frequency analyzers For detailed design and engineering purpose using a set of filters. Graphic recorders Attached to sound level meter. Plots the SPL as a function of time on a moving paper chart. Noise dosimeters Used to find out the noise levels in a working environment attached to the worker

14. What is noise ?

Noise is defined as unwanted sound. A sound might be unwanted because it is loud, distracting, or annoying.

15. How is noise measured ?

Literally speaking, noise can't be measured directly, since there is no instrument for objectively detecting how "unwanted" something is. What can be measured is the sound level, a quantification of a sound's pressure or intensity and related to its loudness. Sound level is measured in decibels (dB), by a device called a sound level meter.

16. What is a decibel ?

What are typical decibel levels of some common sounds? A whisper is 30 dB, conversational speech is 60 dB, and someone shouting at you from an arm's length away is 85 dB. Noise levelsof home appliances range from 50 dB (a refrigerator) to 95 dB (a food processor). Lawn equipment and power tools have noise levels of 80–120 dB.

17. How many decibels can the human ear handle ?

Immediate and irreversible nerve damage can be caused by sounds at 140 dB or higher (120 dB in young children). However, damage also occurs at lower sound levels, and this harm accumulates over time. Any sound above 85 dB can cause wear and tear on your ears that reduces your hearing acuity over time.

18. What is the loudest sound possible ?

Sound is normally carried in air as a pressure wave. When the pressure of a sound wave becomes as high as the air pressure itself, the sound becomes a shock wave. Normal air pressure at sea level is 14.7 pounds per square inch (psi), or 101,325 pascals (Pa), which is equivalent to 194 decibels (dB). So 194 dB is the loudest sound possible in air at sea level; beyond that point it becomes a shock wave. (Sound waves that are transmitted through water or other substances would have different limits.)

19. What are the effects of noise on human health ?

Noise has direct physiological effects such as hearing damage (including hearing loss and tinnitus, or ringing in the ears), as well as cardiovascular and hormonal disturbances. Indirect effects include sleep loss, interference with concentration and learning, mood changes and aggression, and social isolation.

20. How does noise affect babies and children ?

Because the ear canal of a young child is smaller than an adult's, sound pressure is up to 20 dB greater than that in an adult ear. In addition to the threat to a child's hearing, noise causes physiological and mental stress, and significantly impacts learning and cognitive development. Background noise also interferes with speech perception and language acquisition.

21. What is "white noise" ?

White noise is a sound similar to radio static, or the sound a fan makes, that is often used to mask unpleasant sounds. Some people find it helpful for sleeping, and it can be a soothing sound for babies.

22. What are the most common sources of noise pollution ?

Worldwide, the most common sources of noise pollution are cars, trucks, and other motor vehicles. Planes and trains also contribute to noise pollution. Other sources include factory machinery, power tools, and construction equipment.

23. What problems does noise pollution cause for people ?

The World Health Organization (WHO) cites seven categories for the ways noise adversely affects human health: Noise-induced hearing impairment Interference with speech communication Sleep disturbances Cardiovascular and physiological effects Mental health effects on performance of tasks Annoyance and effects on behavior.

24. What problems does noise pollution cause for animals ?

Wild animals rely on their hearing for detecting predators, finding mates, establishing territory, and recognizing warning alerts. Unnaturally high levels of noise can damage their hearing and can also mask more subtle sounds that they need to hear in order to survive and reproduce. They may also react with a fight-or-flight response to artificial sounds such as aircraft noise, thereby using up valuable energy reserves to flee from a non-existent predator. If noise in an area becomes too intrusive, animals may shift to a new territory or alter their migration patterns, which can create new complications for their mating and survival.

24. What are the laws regarding noise pollution ?

Occupational noise is treated as a health and safety issue and is regulated at the state or national level in many countries. Community noise is typically regarded as a nuisance issue rather than a matter of health, and is normally regulated at local levels of government. The regulations and levels of enforcement vary widely across different communities, and worldwide. Noise-generating products such as automobiles and aircraft may be controlled by industry regulations, and building codes may set requirements for reducing sound transmission in new building construction projects.

25. What can you do personally to reduce my own noise pollution ?

Mow your lawn at times that are reasonable for your neighborhood, Avoid using high-noise yard tools such as leaf blowers and power hedge trimmers, Keep your motor vehicle's muffler in good condition, Only honk your horn in an emergency, Train your dog not to bark inappropriately, Put your cell phone on "vibrate" mode, and excuse yourself to a private area to conduct a phone conversation, Turn off the TV if no one is watching it, If you want to. enjoy loud music, use headphones.

OCE551 - AIR POLLUTION AND CONTROL ENGINEERING

UNIT-I

INTRODUCTION

PART-A (2MARKS)

1. Mention the classification of air pollutants. **(May/June2016)**
2. List two effects of air pollutants on materials. **(May/June2016)**
3. Name the method to measure concentration of SO_2 and NO_2. **(May/June2012)**
4. Brief the effect of carbon monoxide on human beings. **(May/June2012,Nov/Dec2012)**
5. Define Isokinetic conditions. **(Nov/Dec2012**)
6. Define primary and secondary air pollutants. Give examples**. (Nov/Dec2011)**
7. What is a representative sample? **(Nov/Dec2011,Nov/Dec2013)**
8. What do you mean by secondary pollutants state an example? **(May/June2013,May/June2012,Nov/Dec2013,Nov/Dec2012)**
9. What is the purpose of measuring stack gas temperature and pressure in stack sampling? **(May/June2013)**
10. What is Iso-kinetic sampling? **(May/June2012)**
11. Write a short notes on aerosol. **(May/June2013)**
12. Mention the objectives of air sampling**. (Nov/Dec2012)**
13. Name three important oxides of nitrogen responsible of air pollution. **(May/June2013)**
14. List out the ozone depleting compounds**. (Nov/Dec2013)**
15. Write the effects of air pollution on plants. **(May/June2013)**
16. Define mist. **(May/June2013**)
17. Differentiate pollution and pollutant. **(Nov/Dec2015)**
18. State the basic principles of sampling. **(Nov/Dec2015,May/June2016)**
19. What is global warming? **(May/June2013)**
20. What are greenhouse gases? Give examples. **(Nov/Dec2012)**
21. List out the analysis of air pollutants. **(May/June2014)**
22. Name some of the natural and manmade sources of air pollutants.
23. State the effects of air pollution on aquatic life.
24. What is acid rain?
25. What are the physical effects of air pollution?

PART-B (16MARKS)

1. List out the various air pollutants, their sources and its effect on both plant and human being. (**May/June2012, May/June2013, Nov/Dec2011,Nov/Dec2013)**
2. Explain the detail procedure to find out the concentration of RSPM,SPM and gaseous pollutant in ambient air using High Volume Sampler. **(May/June2012,Nov/Dec2013)**
3. Write the effects of air pollution on human beings. **(May/June2016,May/June2013,Nov/Dec2013)**
4. What is global warming? Discuss its occurrence pollutants responsible and impacts. (**May/June2013,May/June2012,Nov/Dec2013)**
5. Write the causes, effects and control of ozone layer depletion**.(May/June2016)**
6. Explain the economical impacts of air pollution. Give example. **(Nov/Dec2011,Nov/Dec2012)**

UNIT – II

METEOROLOGY

PART-A (2MARKS)

1. Write the types of inversion. **(May/June2016)**
2. Mention the purpose of wind rose diagram. **(May/June2016,Nov/Dec2015)**
3. List out the meteorological factors in the content of air pollution. **(May/June2012)**
4. What is the prime mechanism to disperse air pollution? **(May/June2012)**
5. Define atmospheric stability? **(Nov/Dec2012,May/June2012)**
6. What are dispersion models? **(Nov/Dec2012,May/June2012)**
7. What is mixing height? **(Nov/Dec2011,May/June2014)**
8. Define plume rise. **(Nov/Dec2011)**
9. What is planetary boundary layer? **(May/June2013**)
10. What is turbulence and how it is formed? **(May/June2013)**
11. Express Gaussian dispersion model**. (Nov/Dec2012)**
12. State the types of dispersion model. **(May/June2013)**
13. What are the types of plume? **(May/June2016)**
14. How to winds play its role in air pollution? **(May/June2012)**
15. Define plume. **(Nov/Dec2012)**
16. What are the objectives of studying the meteorological factors?
17. Define negative lapse rate.
18. What is lapse rate?
19. What are the factors influencing plume behaviour?
20. Name the layers of the atmosphere from the lowest to highest.
21. Define radiation inversions.
22. Differentiate dry and wet adiabatic lapse rates.
23. What are the types of wind?
24. Define ELR.
25. Define pollution rose.

PART-B (16MARKS)

1. What are the meteorological factors influencing the air pollution? Explain briefly. **(Nov/Dec2011,Nov/Dec2012,May/June2013)**
2. With neat sketch, explain effect of lapse rate on plume behaviour. **(May/June2016,May/June2012)**
3. Explain Gaussian dispersion model with assumption, merits and demerits. **(May/June2012,Nov/Dec2012,May/June2016)**
4. What are dispersion models? State the types and explain them. **(May/June2013,Nov/Dec2015)**
5. Explain the plume behaviour form a stack with respect to the different prevailing lapse rate. Use neat sketches. **(May/June2012,Nov/Dec2015)**
6. Explain the factors affecting dispersion of air pollutants**. (May/June2016)**

UNIT-III

CONTROL OF PARTICULATE CONTAMINANTS

PART-A (2MARKS)

1. Write the equipments used to control particulate matter. **(May/June2012,May/June2016)**
2. Write the formula to calculate the efficiency in gravitation settling chamber. **(May/June2016)**
3. Define adsorption. **(May/June2012)**
4. What is the pollution control equipment? **(Nov/Dec2012)**
5. How does condensation bring up pollution control**? (Nov/Dec2012)**
6. Write the principle of ESP. **(Nov/Dec2011)**
7. Differentiate between adsorption and absorption. **(Nov/Dec2011,Nov/Dec2015)**
8. What is meant by pollution control by fugitive emission containment? **(May/June2013)**
9. State the particulate size which can be removed in a settling chamber and an ESP. **(May/June2013)**
10. How combustion brings pollution control? **(May/June2012)**
11. What is wet scrubbing? **(May/June2012)**
12. List the principles of control of particulate matter. **(Nov/Dec2015)**
13. What is scrubbing? **(Nov/Dec2012)**
14. Define inertial separators. **(May/June2013)**
15. Merits and demerits of filtration process use bag house filter. **(Nov/Dec2012)**
16. What are the air pollution control strategies? **(Nov/Dec2012)**
17. State the types of inertial separator**. (May/June2013)**
18. Mention any two control equipments for removing fine particulate matter. **(Nov/Dec2007)**
19. What is cyclone separator? **(Nov/Dec2012)**
20. List the factors influencing the choice of air pollution control equipment. **(May/June2013)**
21. What are wet collection devices?
22. State the main objectives of controlling the air pollution.
23. Name some of adsorption units.
24. What are the merits and demerits of ESP?
25. Define scavenging.

PART-B (16MARKS)

1. With neat sketch explain the working principle of electrostatic precipitator. (**May/June2016,May/June2012,Nov/Dec2012)**
2. Explain how gaseous pollutants are controlled using principle of adsorption and absorption. **(May/June2016,May/June2013,Nov/Dec2012)**
3. How does a bag house filter work? What are the positives and negatives of filtration process? **(Nov/Dec2012,May/June2013)**
4. Suggest an air pollution control plan for a cement industry and justify. **(Nov/Dec2011,Nov/Dec2012)**
5. Explain the process of selection of air pollution control equipment. **(Nov/Dec2015)**
6. Explain the principle of operation and working of a settling chamber. How its efficiency can be improved? **(May/June2013)**

UNIT – IV

CONTROL OF GASEOUS CONTAMINANTS

PART-A (2MARKS)

1. Define the term air quality index. **(May/June2012,Nov/Dec2011)**
2. Brief about air act. **(May/June2012)**
3. Define air pollution index **(Nov/Dec2012)**
4. What is zoning of a city? **(Nov/Dec2012)**
5. What is zoning in air pollution control measures? **(Nov/Dec2011)**
6. What are air quality Standards? **(May/June2013)**
7. State the purpose of air quality monitoring. **(May/June2013)**
8. What are the emission standards? **(May/June2012)**
9. Define EIA. **(Nov/Dec2012,May/June2016)**
10. List the air quality standards for residence zone. **(Nov/Dec2015)**
11. List the enforcement authority for preventing air pollution. **(Nov/Dec2015)**
12. Mention the advantages of Environmental Impact Assessment. (**Nov/Dec2015)**
13. Write the purpose of air quality index. **(May/June2016)**
14. What are the types of industrial zone? **(May/June2016)**
15. Define ambient air quality**. (May/June2014)**
16. State the objectives of ambient air quality standards. **(May/June2012)**
17. What is soiling index?
18. State the objectives of air zoning.
19. Define EIA report.
20. What is an environmental impact?
21. List out the factors considered in the ambient air quality monitoring.
22. What are the air pollution factors to be considered while locating a new industry?
23. State the types of EIA.
24. What are the different methods of zoning?
25. What are emission measurements?

PART-B (16MARKS)

1. Describe the step by step procedure of Environmental Impact Assessment. (**Nov/Dec2015,May/June2013,Nov/Dec2012)**
2. Explain how the air quality monitoring is carried out. **(May/June2013,May/June2012)**
3. What are the preventive measures for air pollution? How do 'Town Planning' bring air pollution control? Explain. **(May/June2013,May/June2012,May/June2016)**
4. State and explain the goals of air quality standards. **(May/June2012,Nov/Dec2012)**
5. Discuss environmental legislation regarding air pollution control. **(Nov/Dec2015,May/June2012,May/June2016)**
6. Explain the advantages of Environmental Impact Assessment. **(Nov/Dec2015)**

UNIT-V

INDOOR AIR QUALITY MANAGEMENT

PART-A (2MARKS)

1. What is noise? **(May/June2012)**
2. Define sound pressure level**? (May/June2012,Nov/Dec2012)**
3. Define L_N and L_{equ}. **(Nov/Dec2012**)
4. What is threshold shift? **(Nov/Dec2012,May/June2012)**
5. How is a noise characterized? **(Nov/Dec2011)**
6. What are the strategies of noise control? **(Nov/Dec2011)**
7. What are the various noise sources? **(May/June2013,May/June2016)**
8. State the noise standards**. (May/June2013)**
9. Define noise pollution. (**Nov/Dec2015)**
10. What is noise indicator? **(May/June2016)**
11. Write the effects of noise pollution. **(May/June2016)**
12. What are the preventive methods of noise pollution? **(Nov/Dec2015)**
13. Define wave number. **(May/June2012)**
14. What is noise rating system? **(Nov/Dec2011)**
15. Enumerate the causes for noise pollution**. (May/June2016)**
16. State ultrasound. **(May/June2012)**
17. Write a short note on noise criteria. **(May/June2012)**
18. How sounds are classified? **(Nov/Dec2007)**
19. List out the classification of noise pollution**. (May/June2014)**
20. What are the factors influencing the method of selection of noise control in transmission path? **(Nov/Dec2011)**
21. Define noise assessment.
22. What are the objectives of noise measurement?
23. What is meant by SAC?
24. Define NRC.
25. What are the factors influencing the intensity of traffic noise?

PART-B (16MARKS)

1. Explain the effects and assessment of Noise Pollution and list the standards. **(Nov/Dec2015,May/June2016)**
2. Make a detailed discussion on effects of Noise Pollution. **(Nov/Dec2012,May/June2013,May/June2016)**
3. Explain the different noise control methods. **(Nov//Dec2012,May/June2013,Nov/dec2015)**
4. What is noise rating system? What is its importance? (**May/June2012,Nov/Dec2012,Nov/Dec2011)**
5. Describe the sources of Noise Pollution. **(May/June2012,Nov/Dec2015)**
6. Explain the methods to control noise pollution in industrial area. **(May/June2016)**