**V.S.B. ENGINEERING COLLEGE, KARUR**

**Department of Mechanical Engineering**

**III YEAR**

**Assignment Questions**

**Subject Code & Name** : ME 8593 & Design of Machine Elements

| SL.NO | ASSIGNMENT DETAILS |
|---|---|
| 1. | How do you classify materials for engineering use? What are the factors to be considered for the selection of materials for the design of machine elements? Discuss. |
| 2. | What is meant by 'hole basis system' and 'shaft basis system'? Which one is preferred and why? |
| 3. | The crankpin of an engine sustains a maximum load of 35 kN due to steam pressure. If the allowable bearing pressure is 7 N/mm$^2$, find the dimensions of the pin. Assume the length of the pin equal to 1.2 times the diameter of the pin. |
| 4. | Suggest suitable materials for the following parts stating the special property which makes it more suitable for use in manufacturing:<br>1. Diesel engine crankshaft ; 2. Automobile tyres ; 3. Roller bearings ; 4. High pressure steam pipes ; 5. Stay bar of boilers ; |
| 5. | Explain the following terms in connection with design of machine members subjected to variable loads: (*a*) Endurance limit, (*b*) Size factor, (*c*) Surface finish factor, and (*d*) Notch sensitivity. |
| 6. | Draw the stress- time diagram for the following types of stresses: (i) fluctuating stress (ii) repeated stress (iii) reversed stress. Give practical examples for each. |
| 7. | What is a curved beam? Give practical examples with neat sketches of machine components made of curved beams. |
| 8. | A stepped shaft has maximum diameter 45 mm and minimum diameter 30 mm. The fillet radius is 6 mm. If the shaft is subjected to an axial load of 10 kN, find the maximum stress induced, taking stress concentration into account. |
| 9. | Design a crane hook to carry a load of 20 kN and present the dimensions in a neat sketch. |
| 10. | Suggest suitable materials for the following parts stating the special property which makes it more suitable for use in manufacturing:<br>1. Worm and worm gear ; 2. Dies; 3. Tramway axle ; 4. Cam follower ; 5. Hydraulic |

| SL.NO | ASSIGNMENT DETAILS |
|---|---|
| | brake piston. |
| 11. | Distinguish stress distribution in curved and straight beams for various cross sections with neat sketches. |
| 12. | A hollow shaft of 40 mm outer diameter and 25 mm inner diameter is subjected to a twisting moment of 120 N-m, simultaneously, it is subjected to an axial thrust of 10 kN and a bending moment of 80 N-m. Calculate the maximum compressive and shear stresses. |
| 13. | What do you understand by preferred numbers? Explain fully. Present all the series of preferred numbers in a table. |
| 14. | The load on a bolt consists of an axial pull of 10 kN together with a transverse shear force of 5 kN. Find the diameter of bolt required according to<br>1. Maximum principal stress theory; 2. Maximum shear stress theory and 3. Maximum distortion energy theory. |
| 15. | Write Soderberg's equation and state its application to different type of loadings. What information do you obtain from Soderberg diagram? |
| 16. | What do you understand by the nominal size and basic size? Explain about tolerance analysis. |
| 17. | Explain the following heat treatment processes: 1. Normalising; 2. Hardening; and 3.Tempering. |
| 18. | What are fits and tolerances? How are they designated? Explain in detail with neat sketches. |
| 19. | The piston rod of a steam engine is 50 mm in diameter and 600 mm long. The diameter of the piston is 400 mm and the maximum steam pressure is 0.9 $N/mm^2$. Find the compression of the piston rod if the Young's modulus for the material of the piston rod is 210 $kN/mm^2$. |
| 20. | A mild steel rod supports a tensile load of 50 kN. If the stress in the rod is limited to 100 MPa, find the size of the rod when the cross-section is 1. circular, 2. square, and 3. rectangular with width = 3 × thickness. |
| 21. | A rectangular plate 50 mm × 10 mm with a hole 10 mm diameter is subjected to an axial load of 10 kN. Taking stress concentration into account, find the maximum stress induced. |
| 22. | What is meant by eccentric loading and eccentricity? Give practical examples with neat sketches of machine components with eccentric loading and explain how it can be |

| SL.NO | ASSIGNMENT DETAILS |
|---|---|
| | designed. |
| 23. | Obtain a relation for the maximum and minimum stresses at the base of a symmetrical column, when it is subjected to (*a*) an eccentric load about one axis, and (*b*) an eccentric load about two axes. |
| 24. | Define principal stresses and principal planes and Explain about the determination of Principal Stresses for a member subjected to Bi-axial stress. |
| 25. | What is the difference in the type of assembly generally used in running fits and interference fits? |
| 26. | State the alloying elements added to steel to get alloy steels and the effect they produce. Give at least one example of each. |
| 27. | Derive torsional equation and explain how it can be applied in designing of shafts. |
| 28. | Write short notes on the following : (*a*) Interchangeability; (*b*) Tolerance; (*c*) Allowance; and (*d*) Fits. |
| 29. | Enumerate the most commonly used engineering materials and state at least one important property and one application of each. |
| 30. | What are the common materials used in Mechanical Engineering Design? How can the properties of steel be improved? |
| 31. | A hydraulic press exerts a total load of 3.5 MN. This load is carried by two steel rods, supporting the upper head of the press. If the safe stress is 85 MPa and E = 210 kN/mm2, find : 1. diameter of the rods, and 2. extension in each rod in a length of 2.5 m. |
| 32. | Distinguish clearly amongst cast iron, wrought iron and steel regarding their constituents and properties. |
| 33. | Define ‘mechanical property’ of an engineering material. Define all the properties of a material and give some examples of the material possessing the properties. |
| 34. | State briefly unilateral system of tolerances covering the points of definition, application and advantages over the bilateral system. |
| 35. | A mild steel shaft of 50 mm diameter is subjected to a bending moment of 2000 N-m and a torque T. If the yield point of the steel in tension is 200 MPa, find the maximum value of this torque without causing yielding of the shaft according to 1. the maximum principal stress; 2. the maximum shear stress; and 3. the maximum distortion strain energy theory of yielding. |

| SL.NO | ASSIGNMENT DETAILS |
|---|---|
| 36. | Select suitable materials for the following parts stating the special property which makes it most suitable for use in manufacturing:<br>1. Cams, 2. Heavy duty machine tool beds, 3. Ball bearing, 4. Automobile cylinder block, 5. Helical springs. |
| 37. | State Hencky and Von Mises theory of failure with a mathematical expression. Why Hencky and Von Mises theory of failure is widely used in design of machine components? |
| 38. | Select suitable materials for the following parts stating the special property which makes it most suitable for use in manufacturing:<br>1. Turbine blade, 2. Bush bearing, 3. Dies, 4. Carburetor body, 5. Keys (used for fastening), |
| 39. | A shaft is transmitting 97.5 kW at 180 r.p.m. If the allowable shear stress in the material is 60 MPa, find the suitable diameter for the shaft. The shaft is not to twist more that 1° in a length of 3 metres. Take C = 80 GPa. |
| 40. | Select suitable material for the following cases, indicating the reason;<br>1. A shaft subjected to variable torsional and bending load; 2. Spring used in a spring loaded safety valve; 3. Nut of a heavy duty screw jack; and 4. Low speed line-shaft coupling. |
| 41. | Obtain a relation for the maximum and minimum stresses at the base of a symmetrical column, when it is subjected to (*a*) an eccentric load about one axis, and (*b*) an eccentric load about two axes. |
| 42. | A cylindrical shaft made of steel of yield strength 700 MPa is subjected to static loads consisting of bending moment 10 kN-m and a torsional moment 30 kN-m. Determine the diameter of the shaft using two different theories of failure, and assuming a factor of safety of 2. Take E = 210 GPa and poisson's ratio = 0.25. |
| 43. | State maximum principal stress and maximum shear stress theories of failure with a mathematical expression. Give the application for each and justify. |
| 44. | Explain how the factor of safety is determined under steady and varying loading by different methods. |
| 45. | State Saint Venant’s and Haigh’s theories of failure with a mathematical expression. Give the application for each and justify. |
| 46. | Discuss in detail about the machine components that fail by fatigue with suitable illustrations. |

| SL.NO | ASSIGNMENT DETAILS |
|---|---|
| 47. | Discuss the Indian standard system of limits and fits. What are the commonly used fits according to Indian standards? |
| 48. | Derive bending equation and explain how it can be applied in designing of straight beams. |
| 49. | Illustrate with neat sketches how the stress concentration in a component can be reduced. |
| 50. | Explain with example about the application of Principal stresses in Designing machine members. |
| 51. | With neat sketch give the expression for 'Area moment of Inertia' and 'Section modulus for commonly used cross sections. |
| 52. | A shaft is transmitting 100 kW at 160 r.p.m. Find a suitable diameter for the shaft, if the maximum torque transmitted exceeds the mean by 25%. Take maximum allowable shear stress as 70 MPa. |
| 53. | What is meant by endurance strength of a material and how it is determined? How do the size and surface condition of a component and type of load affect such strength? |
| 54. | Discuss the important non-metallic materials of construction used in engineering practice. |
| 55. | Explain about Soderberg's and Goodman lines with neat sketches and give its applications. |

**Subject Name/Code: Dynamics of Machines/ME8594**

| S.No | Topic Details |
|---|---|
| 1. | Explain dynamic force analysis of a 4 link mechanism |
| 2. | Explain Dynamic Equivalence. |
| 3. | Explain dynamic force analysis of a slider crank mechanism. |
| 4. | What is engine force analysis? |
| 5. | Determine of force & couple of a link. |
| 6. | Explain general principal of force analysis. |
| 7. | Explain slider crank mechanism with figure. |
| 8. | Explain four link mechanism with figure. |

| | |
|---|---|
| 9. | Explain the different parts of Dynamics of Machinery. |
| 10. | Explain the degrees of freedom with sketch. |
| 11. | Define equilibrium with respect to two force members and three force members. |
| 12. | State the conditions for static equilibrium of a body, subjected to a system of i) two forces ii) three forces. |
| 13. | Give significance of static force analysis of mechanisms. |
| 14. | Explain the procedure for static force analysis of slider-crank mechanism |
| 15. | Explain principle of virtual work application to static force analysis |
| 16. | Explain the procedure for static force analysis of four bar mechanism. |
| 17. | Derive an expression for 'size of fly wheel'. |
| 18. | What is the function of a flywheel? How does it differ from that of a governor? Explain it. |
| 19. | Explain the concept of balancing in bikes. |
| 20. | Explain Methods for Determining the Velocity of a Point on a Link |
| 21. | Explain Method of Locating Instantaneous Centres in a Mechanism |
| 22. | What do you understand by the instantaneous centre of rotation (centro) in kinematic of machines? Answer briefly. |
| 23. | Explain the concept of balancing in four wheelers. |
| 24. | Explain, with the help of a neat sketch, the space centrode and body centrode. |
| 25. | Explain with sketch the instantaneous centre method for determination of velocities of links and mechanisms. |
| 26. | Write the relation between the number of instantaneous centres and the number of links in a mechanism. |
| 27. | Discuss the three types of instantaneous centres for a mechanism. |
| 28. | State and prove the ‘Aronhold Kennedy’s Theorem’ of three instantaneous centres. |
| 29. | Describe the method to find the velocity of a point on a link whose direction (or path) is known and the velocity of some other point on the same link in magnitude and direction is given. |
| 30. | Explain how the velocities of a slider and the connecting rod are obtained in a slider crank mechanism. |
| 31. | Define rubbing velocity at a pin joint. What will be the rubbing velocity at pin joint when the two links move in the same and opposite directions ? |
| 32. | What is the difference between ideal mechanical advantage and actual mechanical advantage ? |

| | |
|---|---|
| 33. | Explain how the acceleration of a point on a link (whose direction is known) is obtained when the acceleration of some other point on the same link is given in magnitude and direction. |
| 34. | Draw the acceleration diagram of a slider crank mechanism. |
| 35. | Explain how the coriolis component of acceleration arises when a point is rotating about some other fixed point and at the same time its distance from the fixed point varies. |
| 36. | Derive an expression for the magnitude and direction of coriolis component of acceleration. |
| 37. | Sketch a quick return motion of the crank and slotted lever type and explain the procedure of drawing the velocity and acceleration diagram, for any given configuration of the mechanism. |
| 38. | Write a short note on gyroscope. |
| 39. | What do you understand by gyroscopic couple ? Derive a formula for its magnitude. |
| 40. | Explain the application of gyroscopic principles to aircrafts. |
| 41. | Describe the gyroscopic effect on sea going vessels. |
| 42. | Explain the effect of the gyroscopic couple on the reaction of the four wheels of a vehicle negotiating a curve. |
| 43. | Discuss the effect of the gyroscopic couple on a two wheeled vehicle when taking a turn. |
| 44. | What will be the effect of the gyroscopic couple on a disc fixed at a certain angle to a rotating shaft ? |
| 45. | Draw and explain Klien's construction for determining the velocity and acceleration of the piston in a slider crank mechanism. |
| 46. | Explain Ritterhaus's and Bennett's constructions for determining the acceleration of the piston of a reciprocating engine. |
| 47. | How are velocity and acceleration of the slider of a single slider crank chain determined analytically? |
| 48. | Draw the turning moment diagram of a single cylinder double acting steam engine. |
| 49. | Explain the turning moment diagram of a four stroke cycle internal combustion engine. |

| | |
|---|---|
| 50. | Discuss the turning moment diagram of a multicylinder engine. |
| 51. | What are the effects of friction and of adding a central weight to the sleeve of a Watt governor ? |
| 52. | Why is balancing of rotating parts necessary for high speed engines ? |
| 53. | Discuss inertia effect on the shaft on the free torsional vibrations. |
| 54. | Explain why only a part of the unbalanced force due to reciprocating masses is balanced by revolving mass. |
| 55. | Discuss the balancing of V-engines. |

**Subject name: Metrology and Measurements**

| Sl. No. | Assignment Topics |
|---|---|
| 1. | State and explain five basic elements of measuring system |
| 2. | Describe with net sketch International prototype meter (Material length standard) stating material composition and limitation |
| 3. | Differential line standard and end standard. |
| 4. | Explain various types of Errors in measurement and state how they can take care of. |
| 5. | Explain Optical measuring techniques |
| 6. | Explain construction , working and principle of following: Vernier caliper,Slip gauge |
| 7. | Explain profile projector. |
| 8. | Explain precision instrumentation based on laser principle. |
| 9. | Explain Surface Texture |
| 10. | Explain the elements of surface Roughness |
| 11. | Explain Parkinson gear tester with neat sketch. |
| 12. | Explain radiation pyrometer. |
| 13. | Explain with neat sketch types of expansion thermometer stating applications |
| 14. | Explain construction , working and principle of following:Autocollimator, Clinometers |
| 15. | Explain absorption dynamometers |
| 16. | With the help of a neat sketch explain the working of Tomlinson's surface meter and Profilometer |

| | |
|---|---|
| 17. | Explain different types of load cell. |
| 18. | Explain Standardization and adjustment methods |
| 19. | Explain the need of inspection |
| 20. | Explain working principle of LVDT |
| 21. | Explain the term Roughness used in surface finish |
| 22. | Explain the term Effective profile used in surface finish |
| 23. | explain the working of Tomlinson's surface meter and Profilometer. |
| 24. | Explain alignment test for lathe machine. |
| 25. | Describe with sketch the construction and use of gear tooth vernier caliper. |
| 26. | Explain Optical measuring techniques. |
| 27. | Explain electric and photoelectric techometers |
| 28. | Explain filled system thermometers. |
| 29. | Explain with sketch Measurement of effective diameter by two wire method stating limitation. |
| 30. | Explain Optical pyrometer. |
| 31. | Explain filled system thermometers. |
| 32. | Explain profile projector |
| 33. | Explain construction , working and principle of Sine bar and sine Centre |
| 34. | Explain construction , working and principle of Telescopic gauge |
| 35. | Explain construction , working and principle of Vernier depth gauge |
| 36. | Explain construction , working and principle of Combination square set |
| 37. | Explain with neat sketch three wire method of measuring effective diameter of screw thread. |
| 38. | Explain resistance thermocouple with a neat sketch. |
| 39. | Compare advantages of thermocouple and thermistors |
| 40. | Explain bridge arrangement. |
| 41. | Explain the term Waviness used in surface finish |
| 42. | Explain the term Center of profile used in surface finish |
| 43. | Explain construction , working and principle of Vernier bevel protractor |
| 44. | Describe with sketch the construction and use of gear tooth vernier caliper. How is the |

| | |
|---|---|
| | gear tooth thickness at PCD measured? |
| 45. | Explain radiation and optical pyrometer |
| 46. | Explain construction , working and principle of Johansson mikrokator |
| 47. | Explain construction , working and principle of Sigma comparator |
| 48. | Explain gauge factor |
| 49. | Differential line standard and end standard |
| 50. | Explain construction , working and principle of Angle dekkor |
| 51. | Explain with sketch the construction and working of micrometer. |
| 52. | Explain different types of load cell |
| 53. | Explain construction , working and principle of Dial indicator |
| 54. | Explain piezoelectric Accelerometer |
| 55. | Explain Tool makers microscope |

**Subject name: Production Technology of Agricultural Machinery**

| Sl. No. | Assignment Topics |
|---|---|
| 1 | Gas tungsten arc welding application in industry |
| 2 | Dissimilar metals welding methods |
| 3 | Welding defects , causes, and remedies |
| 4 | Different types of gas welding methods |
| 5 | Automatic welding machine |
| 6 | Overhead welding method |
| 7 | Enumerate with neat sketch, Constructional features of centre lathe. |
| 8 | Mention the specifications of lathe with a neat sketch. |
| 9 | Explain the purpose of centres used in lathe. |
| 10 | Explain the different machining operations performed on lathe with sketches. |
| 11 | How does a turret lathe differ from capstan lathe? Explain. |
| 12 | Explain the various taper turning methods? |
| 13 | Describe the holding devices in a lathe. Also specify its limitations. |
| 14 | Explain with neat sketch of crank and slotted link mechanism. |

| | |
|---|---|
| 15 | Discuss in detail about the features of hydraulic drive of a horizontal shaper and list its limitations. |
| 16 | Explain with a sketch “Fast and loose pulleys” quick return mechanism of a planer table. |
| 17 | What are the various types of milling cutters that are used in milling? Discuss any five. |
| 18 | With a neat sketch explain the column and knee type milling machine and name its main parts. |
| 19 | Discuss push and pull type broaching machines with neat sketches. |
| 20 | Sketch the Quill mechanism .write its main parts and their functions? |
| 21 | Discuss various bonding materials used for making grinding wheel. |
| 22 | Discuss briefly about standard specification of grinding wheel. |
| 23 | Discuss about abrasives used in grinding wheel. |
| 24 | Describe the terms dressing and trueing of grinding wheels. |
| 25 | Explain how wheels is balanced and mounted. |
| 26 | Define CNC and NC. With a help of a diagram explain the working of NC machine tool. |
| 27 | Explain various steps to be followed while developing the CNC part diagrams. |
| 28 | Explain and list the G codes and M codes. |
| 29 | Discuss about slide ways used in CNC machine tools |
| 30 | Narrate the design considerations of CNC machines. |
| 31 | Under what conditions of production the numerically controlled machine tools are employed. |
| 32 | Explain with neat sketch the Plasma arc and write down the advantage and disadvantage |
| 33 | Explain with neat sketch Electro Chemical Honing and write advantage and disadvantage |
| 34 | Explain with neat sketch Electro-discharge machining and write advantage and disadvantage |
| 35 | Write the part program for the part shown below |

| | |
|---|---|
| | 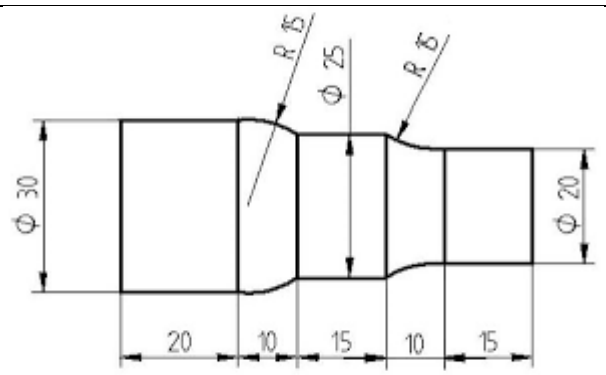 |
| 36 | Write the part program for the part shown below<br> 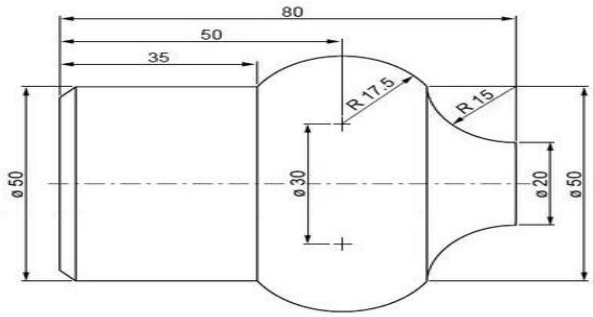 |
| 37 | Write the part program for the part shown below<br> 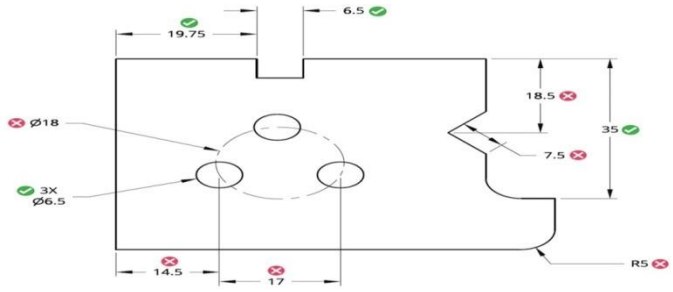 |
| 38 | Write the part program for the part shown below<br> 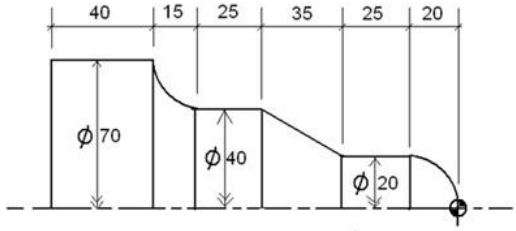 <br>RAW MATERIAL: MS BAR OF DIAMETER 70 MM<br>AND LENGTH 160 MM<br>DIAGRAM NOT TO SCALE<br>ALL DIMENSIONS ARE IN MM |

| | |
|---|---|
| 39 | Write down the advanced material removal rate for CHM |
| 40 | Write down the advanced material removal rate for ECG |
| 41 | Write the part program for the part shown below 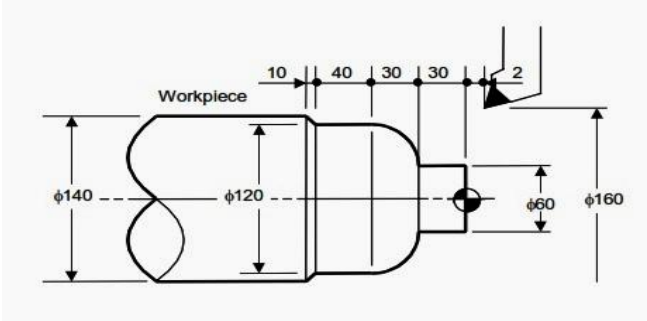  |
| 42 | Explain about Technology of thermal spray coating machining and write advantage and disadvantage |
| 43 | Explain about Electric Discharge Machining on metal matrix composite and write advantage and disadvantage |
| 44 | Explain about Piezoelectric Oscillator and write advantage and disadvantage |
| 45 | Explain about Magnetostriction Generator and write advantage and disadvantage |
| 46 | Write any on practi50cal application for Water jet machining |
| 47 | Write the part program for the part shown below 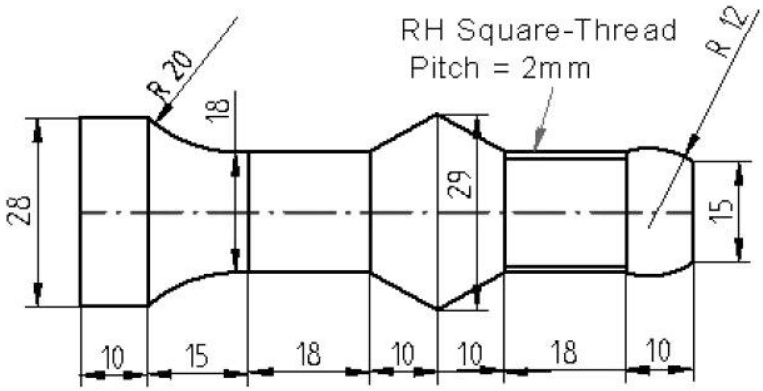  |
| 48 | Explain with neat sketch the Electron beam Machining Process and write advantage and disadvantage |
| 49 | Explain with neat sketch Electro Chemical Grinding and write advantage and disadvantage |
| 50 | xplain with neat sketch Electro Chemical Deburring and write advantage and |

| | |
|---|---|
| | disadvantage |
| 51 | Explain with neat sketch Electro Chemical Honing and write advantage and disadvantage |
| 52 | Explain with neat sketch Electro-discharge machining and write advantage and disadvantage |
| 53 | Write down the process parameter and material removal rate for Abrasive jet machining. |
| 54 | Write down the process parameter and material removal rate for Abrasive water jet machining. |

**Subject name: ME 8595 / Thermal Engineering II**

| **Sl.No.** | **Topic Details** |
|---|---|
| 1 | Dry saturated steam enters a steam nozzle at a pressure of 15 bar and is discharged at a pressure of 2bar. If the dryness fraction of discharge steam is 0.96, what will be the final velocity of steam? Neglect initial velocity of steam. If 10% of heat drop is lost in friction, Examine (find) the percentage reduction in the final velocity. |
| 2 | Describe the expression for critical pressure ratio in terms of index of expansion. |
| 3 | Dry saturated steam at a pressure of 11 bar enters a convergent- divergent nozzle and leaves at a pressure of 2 bar. If the flow is adiabatic and frictionless, determine: (i) The exit velocity of steam. (ii) Ratio of cross section at exit and that at throat. Assume the index of adiabatic expansion to be 1.135. |
| 4 | Dry saturated steam at a pressure of 8 bar enters a convergent divergent nozzle and leaves it at a pressure of 1.5 bar. If the flow is isentropic and if the corresponding expansion index is 1.33, find the ratio of cross-sectional area at exit and throat for maximum discharge. |
| 5 | Steam enters a group of convergent-divergent nozzles at a pressure of 22 bar and with a temperature of 240°C. The exit pressure is 4 bar and 9% of the total heat drop is lost in friction. The mass flow rate is 10kg/s and the flow up to throat may be assumed friction less. Calculate 1.The throat and exit velocities, and 2. The throat and exit areas. |
| 6 | Air enters a frictionless adiabatic converging nozzle at 10 bar 500 K with negligible velocity. The nozzle discharges to a region at 2 bar. If the exit area of the nozzle is 2.5 |

| | |
|---|---|
| | $cm^2$, find the flow rate of air through the nozzle. Assume for air $C_p$ = 1005 J/kg K and $C_v$= 718 J/kg K. |
| 7 | Explain in detail about how accessories differ from mountings. |
| 8 | Explain the function of boiler mountings. Can a boiler work without mountings |
| 9 | Discuss the function of a safety value. State the minimum number of safety value to be used in boiler. |
| 10 | Explain fusible plug and state where it is located in a boiler. |
| 11 | Dry saturated steam at a pressure of 8 bar enters a convergent divergent nozzle and leaves it at a pressure of 1.5 bar. If the flow is isentropic and if the corresponding expansion index is 1.33, find the ratio of cross-sectional area at exit and throat for maximum discharge. |
| 12 | Steam enters a group of convergent-divergent nozzles at a pressure of 22 bar and with a temperature of 240°C. The exit pressure is 4 bar and 9% of the total heat drop is lost in friction. The mass flow rate is 10kg/s and the flow up to throat may be assumed friction less. Calculate 1.The throat and exit velocities, and 2. The throat and exit areas. |
| 13 | Air enters a frictionless adiabatic converging nozzle at 10 bar 500 K with negligible velocity. The nozzle discharges to a region at 2 bar. If the exit area of the nozzle is 2.5 $cm^2$, find the flow rate of air through the nozzle. Assume for air $C_p$ = 1005 J/kg K and $C_v$= 718 J/kg K. |
| 14 | Explain in detail about how accessories differ from mountings. |
| 12 | Explain the function of boiler mountings. Can a boiler work without mountings |
| 16 | Discuss the function of a safety value. State the minimum number of safety value to be used in boiler. |
| 17 | Explain fusible plug and state where it is located in a boiler. |
| 18 | Explain with neat sketch any three of the following mounting:<br>(i) Water level indicator<br>(ii) Pressure gauge |
| 19 | Explain what the sources of heat losses in boiler plants are. What are the methods used to reduce these losses? |
| 20 | With the help of neat sketch, explain and injector for feeding water to the boiler drum. Why it is not used for large capacity boilers? Explain its location in boiler installation. |
| 21 | Explain with neat sketches any two of the following boiler accessories:<br>i) Injector ii) super heater<br>iii) Air preheated iv) Economizer. |
| 22 | A boiler generates 13000 kg of steam at 7 bars during a period of 24 hrs and consume 1250 kg of coal whose CV. = 3000 kJ/kg. Taking the enthalpy of steam coming out of |

| | |
|---|---|
| | boiler = 2507.7 kJ/kg and water is supplied to the boiler at 40$^{o}$C. Find: (a) efficiency of the boiler (b) Equivalent evaporation per kg of coal. |
| 23 | Steam is expanded in a set of nozzles from 10 bar and 200$^{o}$C to 5 bar. What type of Nozzle is it? Neglecting the initial velocity find minimum area of the nozzle required to allow a flow of 3 kg/s under the given conditions. Assume that expansion of steam to be isentropic. |
| 24 | Steam having pressure of 10.5 bar and 0.95 dryness is expanded through a convergent-divergent nozzle and the pressure of steam leaving the nozzle is 0.85 bar. Find the velocity at the throat for maximum discharge conditions. Index of expansion may be assumed as 1.135. Calculate mass rate of flow of steam through the nozzle. |
| 25 | Dry saturated steam enters a frictionless adiabatic nozzle with negligible velocity at a temperature of 300$^{o}$C. It is expanded to pressure of 500 KPa. The mass flow rate is 1 kg/s. Calculate the exit velocity of the steam. |
| 26 | In a steam nozzle, the steam expands from 4 bar to 1 bar. The initial velocity is 60 m/s and the initial temperature is 200$^{o}$C. Determine the exit velocity if the nozzle efficiency is 92% |
| 27 | Dry saturated steam enters a steam nozzle at a pressure of 15 bar and is discharged at a pressure of 2bar. If the dryness fraction of discharge steam is 0.96, what will be the final velocity of steam? Neglect initial velocity of steam. If 10% of heat drop is lost in friction, Examine (find) the percentage reduction in the final velocity. |
| 28 | Describe the expression for critical pressure ratio in terms of index of expansion. |
| 29 | Dry saturated steam at a pressure of 11 bar enters a convergent- divergent nozzle and leaves at a pressure of 2 bar. If the flow is adiabatic and frictionless, determine: (i) The exit velocity of steam. (ii) Ratio of cross section at exit and that at throat. Assume the index of adiabatic expansion to be 1.135. |
| 30 | Dry saturated steam at a pressure of 8 bar enters a convergent divergent nozzle and leaves it at a pressure of 1.5 bar. If the flow is isentropic and if the corresponding expansion index is 1.33, find the ratio of cross-sectional area at exit and throat for maximum discharge. |
| 31 | Steam enters a group of convergent-divergent nozzles at a pressure of 22 bar and with a temperature of 240°C. The exit pressure is 4 bar and 9% of the total heat drop is lost in friction. The mass flow rate is 10kg/s and the flow up to throat may be assumed friction less. Calculate 1.The throat and exit velocities, and 2. The throat and exit areas. |
| 32 | Air enters a frictionless adiabatic converging nozzle at 10 bar 500 K with negligible |

| | |
|---|---|
| | velocity. The nozzle discharges to a region at 2 bar. If the exit area of the nozzle is 2.5 $cm^2$, find the flow rate of air through the nozzle. Assume for air $C_p$ = 1005 J/kg K and $C_v$= 718 J/kg K. |
| 33 | Explain in detail about how accessories differ from mountings. |
| 34 | Explain the function of boiler mountings. Can a boiler work without mountings |
| 35 | Discuss the function of a safety value. State the minimum number of safety value to be used in boiler. |
| 36 | Explain fusible plug and state where it is located in a boiler. |
| 37 | Explain with neat sketch any three of the following mounting:<br>(i) Water level indicator<br>(ii) Pressure gauge |
| 38 | Explain with neat sketch any three of the following mounting:<br>i) Water level indicator<br>ii) Pressure gauge |
| 39 | Explain what the sources of heat losses in boiler plants are. What are the methods used to reduce these losses? |
| 40 | With the help of neat sketch, explain and injector for feeding water to the boiler drum. Why it is not used for large capacity boilers? Explain its location in boiler installation. |
| 41 | Explain with neat sketches any two of the following boiler accessories:<br>i) Injector ii) super heater<br>iii) Air preheated iv) Economizer. |
| 42 | A boiler generates 13000 kg of steam at 7 bars during a period of 24 hrs and consume 1250 kg of coal whose CV. = 3000 kJ/kg. Taking the enthalpy of steam coming out of boiler = 2507.7 kJ/kg and water is supplied to the boiler at 40$^o$C. Find: (a) efficiency of the boiler (b) Equivalent evaporation per kg of coal. |
| 43 | A coal fired boiler plant consumes 400 kg of coal per hour. The boiler evaporates 3200 kg of water at 44.5$^o$C into superheated steam at a pressure of 12 bar and 274.5$^o$C. If the calorific value of fuel is 3276 kJ/kg of coal, determine: i). Equivalent evaporation "from and at 100$^o$C,'' and ii). Thermal efficiency of the boiler. Assume specific heat of superheated steam as 2.1 kJ/kg K. |
| 44 | Steam is expanded in a set of nozzles from 10 bar and 200$^o$C to 5 bar. What type of Nozzle is it? Neglecting the initial velocity find minimum area of the nozzle required to allow a flow of 3 kg/s under the given conditions. Assume that expansion of steam to be isentropic. |
| 45 | Steam having pressure of 10.5 bar and 0.95 dryness is expanded through a convergent-divergent nozzle and the pressure of steam leaving the nozzle is 0.85 bar. Find the velocity at the throat for maximum discharge conditions. Index of expansion may be assumed as 1.135. Calculate mass rate of flow of steam through the nozzle. |
| 46 | Dry saturated steam enters a frictionless adiabatic nozzle with negligible velocity at a temperature of 300$^o$C. It is expanded to pressure of 500 KPa. The mass flow rate is 1 kg/s. Calculate the exit velocity of the steam. |

| | |
|---|---|
| 47 | In a steam nozzle, the steam expands from 4 bar to 1 bar. The initial velocity is 60 m/s and the initial temperature is 200$^{o}$C. Determine the exit velocity if the nozzle efficiency is 92% |
| 48 | Dry saturated steam enters a steam nozzle at a pressure of 15 bar and is discharged at a pressure of 2bar. If the dryness fraction of discharge steam is 0.96, what will be the final velocity of steam? Neglect initial velocity of steam. If 10% of heat drop is lost in friction, Examine (find) the percentage reduction in the final velocity. |
| 49 | Describe the expression for critical pressure ratio in terms of index of expansion. |
| 50 | Dry saturated steam at a pressure of 11 bar enters a convergent- divergent nozzle and leaves at a pressure of 2 bar. If the flow is adiabatic and frictionless, determine: (i) The exit velocity of steam. (ii) Ratio of cross section at exit and that at throat. Assume the index of adiabatic expansion to be 1.135. |
| 51 | Dry saturated steam at a pressure of 11 bar enters a convergent- divergent nozzle and leaves at a pressure of 2 bar. If the flow is adiabatic and frictionless, determine: (i) The exit velocity of steam. (ii) Ratio of cross section at exit and that at throat. Assume the index of adiabatic expansion to be 1.135. |
| 52 | Steam is expanded in a set of nozzles from 10 bar and 200$^{o}$C to 5 bar. What type of Nozzle is it? Neglecting the initial velocity find minimum area of the nozzle required to allow a flow of 3 kg/s under the given conditions. Assume that expansion of steam to be isentropic. |
| 53 | Steam having pressure of 10.5 bar and 0.95 dryness is expanded through a convergent-divergent nozzle and the pressure of steam leaving the nozzle is 0.85 bar. Find the velocity at the throat for maximum discharge conditions. Index of expansion may be assumed as 1.135. Calculate mass rate of flow of steam through the nozzle. |
| 54 | Dry saturated steam enters a frictionless adiabatic nozzle with negligible velocity at a temperature of 300$^{o}$C. It is expanded to pressure of 500 KPa. The mass flow rate is 1 kg/s. Calculate the exit velocity of the steam. |
| 55 | In a steam nozzle, the steam expands from 4 bar to 1 bar. The initial velocity is 60 m/s and the initial temperature is 200$^{o}$C. Determine the exit velocity if the nozzle efficiency is 92% |